PRODUCT INFORMATION PACKET

Model No: 132MTFC6537
Catalog No: R431A
10,1800,TEFC,132M,3/60/575
TEFC

Regal and Marathon are trademarks of Regal Beloit Corporation or one of its affiliated companies.
©2018 Regal Beloit Corporation, All Rights Reserved. MC017097E

Nameplate Specifications

Output HP	**10 Hp**	Output KW	**7.5 kW**
Frequency	**60 Hz**	Voltage	**575 V**
Current	**9.6 A**	Speed	**1765 rpm**
Service Factor	**1.15**	Phase	**3**
Efficiency	**91.7 %**	Duty	**Continous**
Insulation Class	**F**	Design Code	**B**
KVA Code	**N**	Frame	**132M**
Enclosure	**Totally Enclosed Fan Cooled**	Overload Protector	**No**
Ambient Temperature	**40 °C**	Drive End Bearing Size	**6308**
Opp Drive End Bearing Size	**6207**	UL	**Recognized**
CSA	**Y**	CE	**Y**
IP Code	**54**		

Technical Specifications

Electrical Type	**Squirrel Cage Inverter Rated**	Starting Method	**Line Or Inverter**
Poles	**4**	Rotation	**Reversible**
Mounting	**Rigid base**	Motor Orientation	**Horizontal Or Shaft Down**
Drive End Bearing	**Ball**	Opp Drive End Bearing	**Ball**
Frame Material	**Cast Iron**	Shaft Type	**IEC**
Overall Length	**19.76 in**	Shaft Diameter	**1.500 in**
Shaft Extension	**3.14 in**	Assembly/Box Mounting	**F3**
Outline Drawing	**SS622237**	Connection Diagram	**00519001ME**

This is an uncontrolled document once printed or downloaded and is subject to change without notice. Date Created: 07/02/2018

Uncontrolled Copy

SS622237

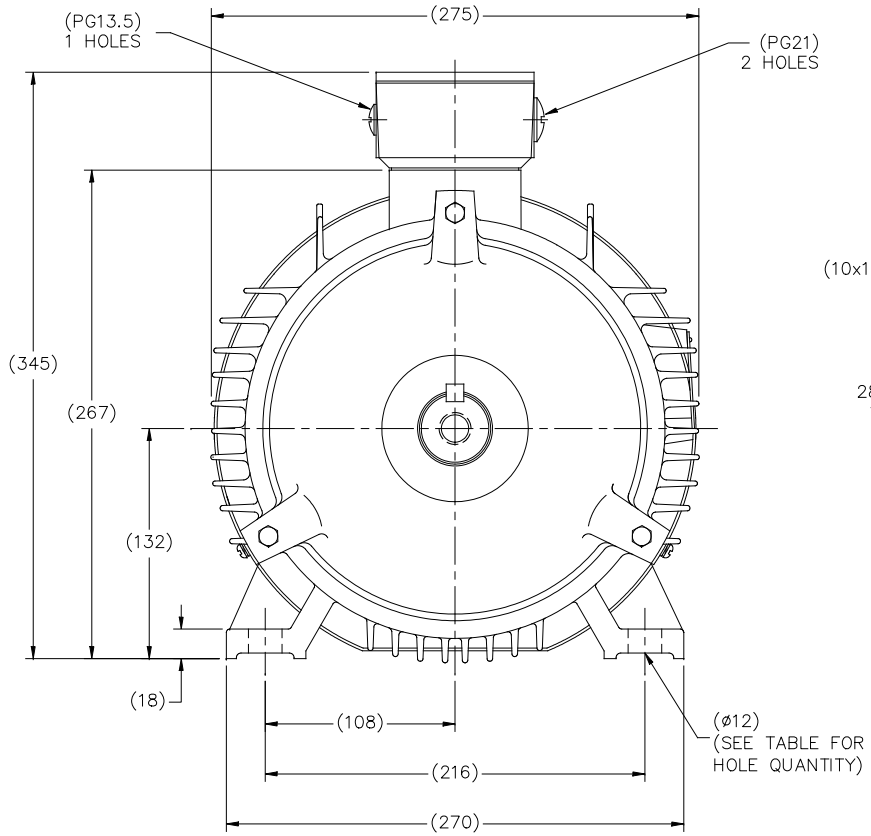

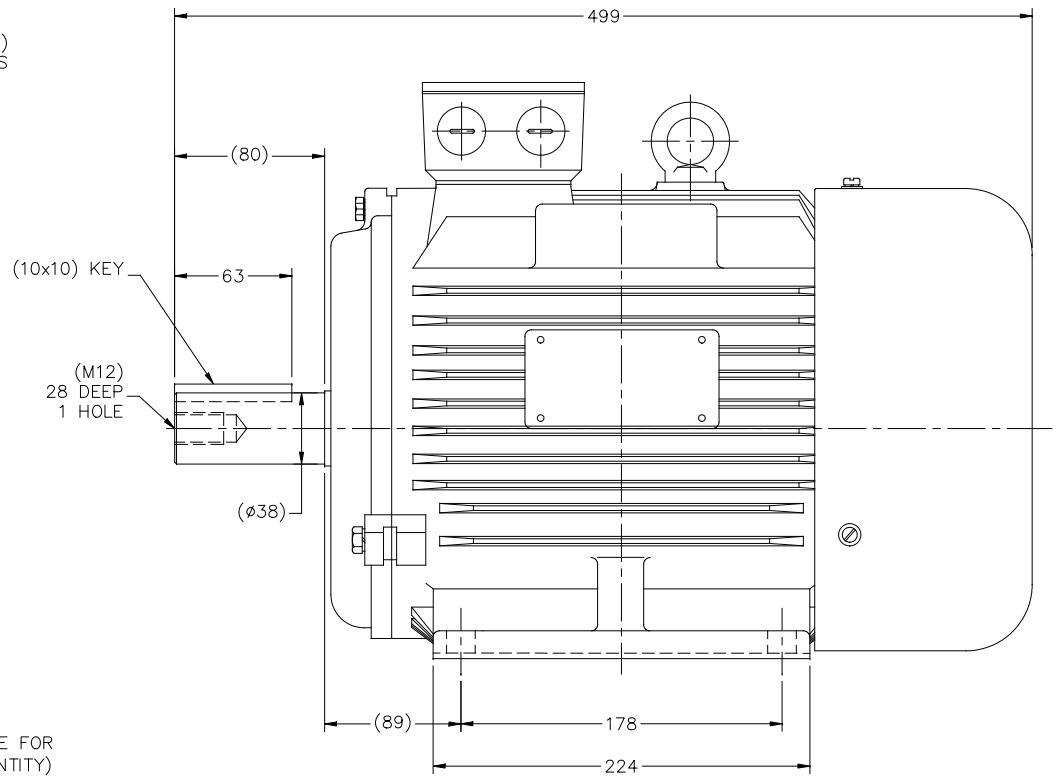

(DRAWING NOT TO SCALE)

(DIMENSIONS ARE IN MILLIMETERS)

DF132M1–6R	4
DF132M2–6R	4
FRAME	# HOLES

NO.	REVISION	BY & DATE
G	(4) FOOT HOLES WERE (6) ECO–0130304	WGJ 10–2–17
2	REM CAT# FROM BLOCK–FOR CAT# SEE SS622237–CAT	MOL 11–29–12
1	REV PG13.5 HOLES WERE 2 QTY	MOL 09–24–12

TOLERANCES UNLESS SPECIFIED

DEC.	METRIC
.X	±2.5
.XX	±.76
.XXX	±.127
.XXXX	±.0127
ANG	±7'30"

CHK EMH

REGAL BELOIT — REGAL-BELOIT CORPORATION

TITLE OUTLINE – IEC PREMIUM DF132–R FRAME

MAT'L.

FINISH

CAD FILE SS622237

RFP 11–18–2010

DIST

DRAWN MSG 11–16–2010
CHK MJS 11–18–2010
APPD SB 11–18–2010
SCALE NONE
REF
FMF HEBEI
PREV

SIZE B | DRAWING NO. SS622237 | PAGE OF | REV. G

THIS DRAWING IN DESIGN AND DETAIL IS OUR PROPERTY AND MUST NOT BE USED EXCEPT IN CONNECTION WITH OUR WORK ALL RIGHTS OF DESIGN AND INVENTION ARE RESERVED
THIS IS AN ELECTRONICALLY GENERATED DOCUMENT – DO NOT SCALE THIS PRINT

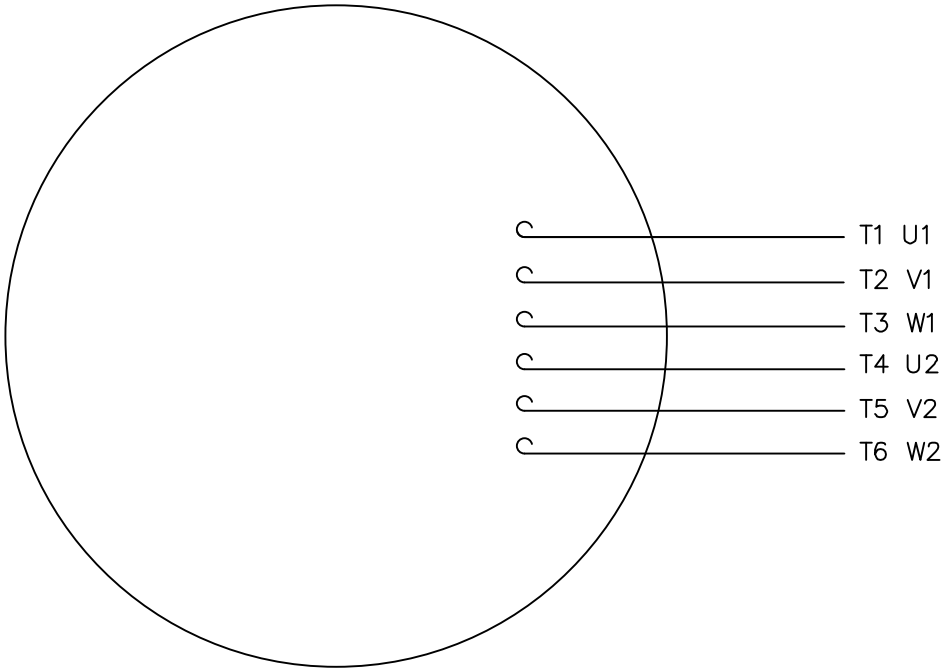

LINE LEADS

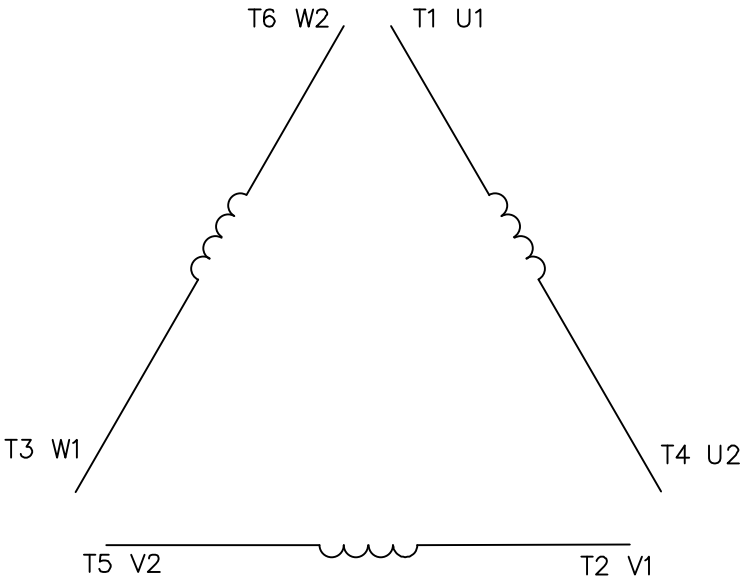

	L1	L2	L3	JOIN
START (WYE)	T1 U1	T2 V1	T3 U2	(T4,T5,T6) (U2,V2,W2)
RUN (DELTA)	(T1,T6) (U1,W2)	(T2,T4) (V1,U2)	(T3,T5) (W1,V2)	

NO.	REVISION	BY & DATE
03	ADDED IEC DESIGNATIONS	MOL 04/27/12
02	REMOVED OBSOLETE STATUS	KJH 06/28/99
01	REDRAWN ON CAD	DBT 05/30/97

TOLERANCES UNLESS SPECIFIED

DEC.	INCHES
.X	±.1
.XX	±.01
.XXX	±.005
.XXXX	±.0005
ANG	±1/2°

CHK

MARATHON ELECTRIC

TITLE EXTERNAL WIRING DIAGRAM
STAR START – DELTA RUN

MAT'L. Y–CONNECTED START – DELTA CONNECTED RUN

FINISH SINGLE VOLTAGE

CAD FILE 00519001ME

RFP

DIST

DRAWN PG 05/07/82
CHK
APPD TEM 05/07/82
SCALE 1=1
REF
FMF
PREV

SIZE A | DRAWING NO. 005190-01ME | REV. 03

THIS DRAWING IN DESIGN AND DETAIL IS OUR PROPERTY AND MUST NOT BE USED EXCEPT IN CONNECTION WITH OUR WORK ALL RIGHTS OF DESIGN AND INVENTION ARE RESERVED
THIS IS AN ELECTRONICALLY GENERATED DOCUMENT – DO NOT SCALE THIS PRINT

4/27/2012 9:57:03 AM - Converted by Connexus

Uncontrolled Copy

P.O. BOX 8003
WAUSAU, WI 54401-8003
PH. 715-675-3311

DATA VOLTS: 460

CERTIFICATION DATA SHEET

CUSTOMER:
ORDER #:
CONN. DIAGRAM: 005190
OUTLINE: SS622237
WINDING: T10704031 NONE 4
SPEED:

CUSTOMER P.O. #:
REFERENCE MODEL #: 132MTFC6537
CAT #: #VALUE!
CUSTOMER PART #:
MOUNTING: F3

TYPICAL MOTOR PERFORMANCE DATA

HP	KW	SYNC RPM	FL RPM	FRAME	ENCLOSURE	TYPE	KVA CODE	DESIGN
10	7.5	1800	1765	132M	TEFC	TFC	N	N

PH	HZ	VOLTS	AMPS	START TYPE	DUTY	INSL	S.F.	AMB	ELEV.
3	60	575	9.6	LINE OR INVERTER	CONT	F	1.15	40	3300

F.L. EFF	91.7	3/4 LD EFF	91.7	1/2 LD EFF	91.7	GTD EFF	ELECT. TYPE
F.L. PF	85.0	3/4 LD PF	80.5	1/2 LD PF	71.0	90.2	SQ CAGE INV RATED

F.L. TORQUE	LR AMPS @ 460 V	L.R. TORQUE	B.D. TORQUE	F.L. RISE (° C)
29.8 LB-FT	74.0	60.0 LB-FT 201%	98.0 LB-FT 329%	40

@ 3 FT.	POWER	ROTOR WK²	MAX. LOAD WK²	SAFE STALL TIME	STARTS/HOUR	MOTOR WGT
48 dBA	57 dBA	0.00 LB-FT²	0 LB-FT²	15 SEC.	2	180 LB.

*** SUPPLEMENTAL INFORMATION ***

DE BRACKET TYPE	ODE BRACKET TYPE	MOUNT TYPE	MOTOR ORIENTATION	SEVERE DUTY	HAZARDOUS LOCATION	DRIP COVER	SCREENS	PAINT
STANDARD	STANDARD	RIGID	ZONTAL OR SHAFT D	TRUE	NONE	NO	NONE	BLUE (ENAMEL)

BEARINGS DE	BEARINGS ODE	GREASE	SHAFT TYPE	SPECIAL DE	SPECIAL ODE	SHAFT MATERIAL	FRAME MATERIAL
BALL 6308	BALL 6207	POLYREX EM	STANDARD IEC	NONE	NONE	1045 HOT ROLLED (C-204	CAST IRON

THERMOSTATS	PROTECTORS	WDG RTD's	BRG RTD's	THERMISTORS	CONTROL	SPACE HEATERS
NONE	NOT	NONE	NONE	NONE	FALSE	NA

R1 (ohms/ph)	R2 (ohms/ph)	X1 (ohms/ph)	X2 (ohms/ph)	Xm (ohms/ph)	VIBRATION (in/sec)	FLOAT
0	0	0	0	0	0.150	ODE

* NOTES *

INVERTER TORQUE: CONSTANT 2:1
INV. HP SPEED RANGE: 1.5 X BASE SPEED

ENCODER: NONE
NONE
NONE NONE PPR

BRAKE: NONE
NONE NONE
FT-LB: NA
VOLTAGE: NONE HZ:
UL: V-INS, CONST UL REC

PREPARED BY: EARL BABBITTS
DATE: 13-07-17

FORM: 3531 REV_4 2/27/06

Uncontrolled Copy

Data Sheet

Date: 6/29/2017
Customer:
Attention:
Submitted by: FAREEDA DUDEKULA

marathon electric

132MTFC6537

Submittal

Data @ 575 V

Motor Load Data

Load	0%	25%	50%	75%	100%	115%	125%	LR	
Current (Amps)	4.0	4.4	5.8	7.6	9.6	10.9	11.8	74.0	
Torque (ft-lb)	0.00	7.3	14.7	22.2	29.8	34.3	37.4	60.0	
RPM	1800	1790	1785	1775	1765	1,760	1755	0	
Efficiency (%)		87.5	91.7	91.7	91.7	91.7	91.0		
P.F. (%)	5.5	49.0	71.0	80.5	85.0	86.0	86.5	40.0	

Motor Speed Data

	LR	Pull-Up	BD	Rated	Idle
Speed (RPM)	0	750	1575	1765	1800
Current (Amps)	74.0	66.4	44.0	9.6	4.0
Torque (ft-lb)	60.0	57.0	98.0	29.8	0.00

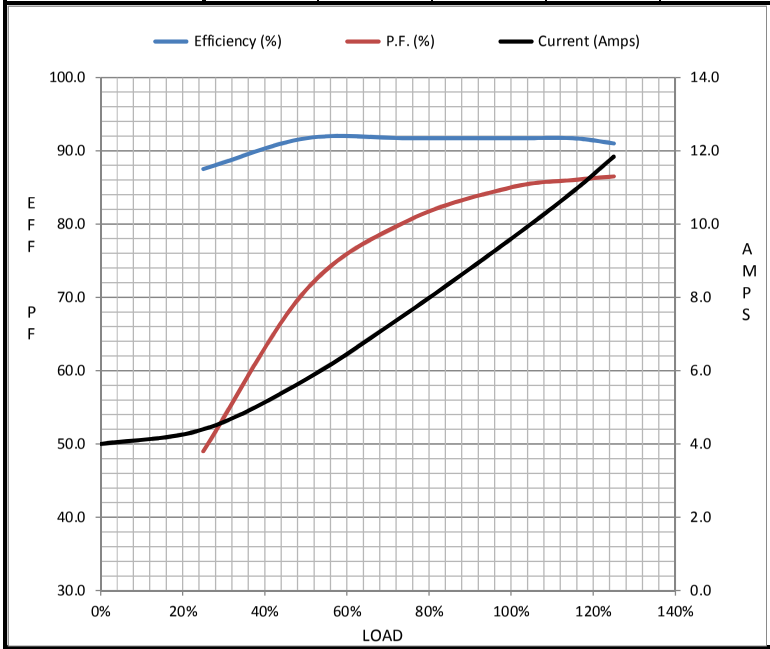

Information Block

HP	10.0	
Sync. RPM	1800	
Frame	132	
Enclosure	TEFC	
Construction	TFC	
Voltage	575	V
Frequency	60	Hz
Design	A	
LR Code letter	N	
Service Factor	1.15	
Temp Rise @ FL	40	° C
Duty	CONT	
Ambient	40	° C
Elevation	1,000	feet
Rotor/Shaft wk²	0.00	Lb-Ft²
Ref Wdg	T10704031	NONE
Sound Pressure @ 1M	48	dBA
VFD Rating	CONSTANT 2:1	
Outline Dwg	SS622237	
Conn. Diag	005190	
Additional Specifications:		
0		
0		

EQUIV CKT (OHMS / PHASE)

R1	R2	X1	X2	Xm
0.0000	0.0000	0.0000	0.0000	0.0000
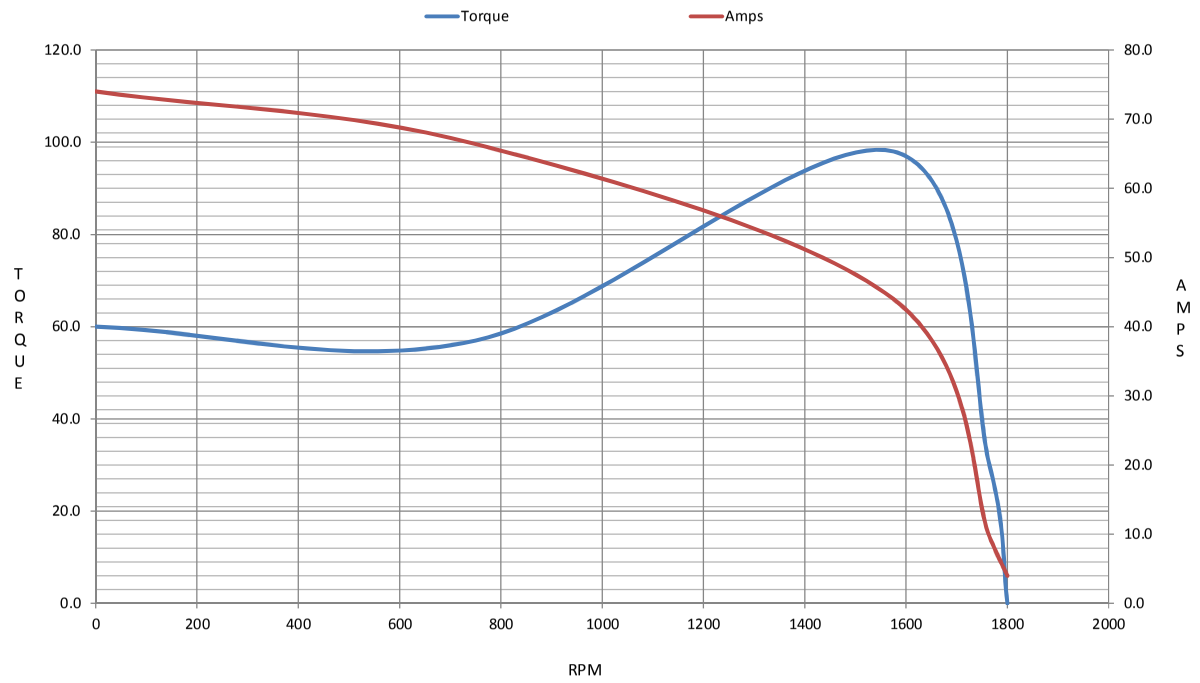
Speed -Torque Curve