PRODUCT INFORMATION PACKET

Model No: AAF4P5TC61Q40
Catalog No: LM22830
5,1800,TEFC,184TC,3/60/230/460
4:1 Speed Ratio

Regal and Leeson are trademarks of Regal Beloit Corporation or one of its affiliated companies.
©2018 Regal Beloit Corporation, All Rights Reserved. MC017097E

Nameplate Specifications

Output HP	**5 Hp**	Output KW	**3.7 kW**
Frequency	**60 Hz**	Voltage	**230/460 V**
Current	**13.4/6.7 A**	Speed	**1750 rpm**
Service Factor	**1**	Phase	**3**
Efficiency	**87.5 %**	Duty	**Continuous**
Insulation Class	**F**	Design Code	**INV**
KVA Code	**L**	Frame	**184TC**
Enclosure	**Totally Enclosed Fan Cooled**	Overload Protector	**No**
Ambient Temperature	**40 °C**	Drive End Bearing Size	**207**
Opp Drive End Bearing Size	**205**	UL	**Recognized**
CSA	**Y**	CE	**Y**
IP Code	**43**		

Technical Specifications

Electrical Type	**Squirrel Cage Inverter Duty**	Starting Method	**Inverter Only**
Poles	**4**	Rotation	**Reversible**
Mounting	**Rigid base**	Motor Orientation	**HORIZONTAL**
Drive End Bearing	**BALL**	Opp Drive End Bearing	**BALL**
Frame Material	**Aluminum**	Shaft Type	**T**
Overall Length	**16.83 in**	Frame Length	**8.20 in**
Shaft Diameter	**1.125 in**	Shaft Extension	**2.75 in**
Assembly/Box Mounting	**F1/F2 CAPABLE**		
Outline Drawing	**B-SS601010LN-820**	Connection Diagram	**A-EE7308T-LN**

This is an uncontrolled document once printed or downloaded and is subject to change without notice. Date Created: 10/15/2018

SS601010LN

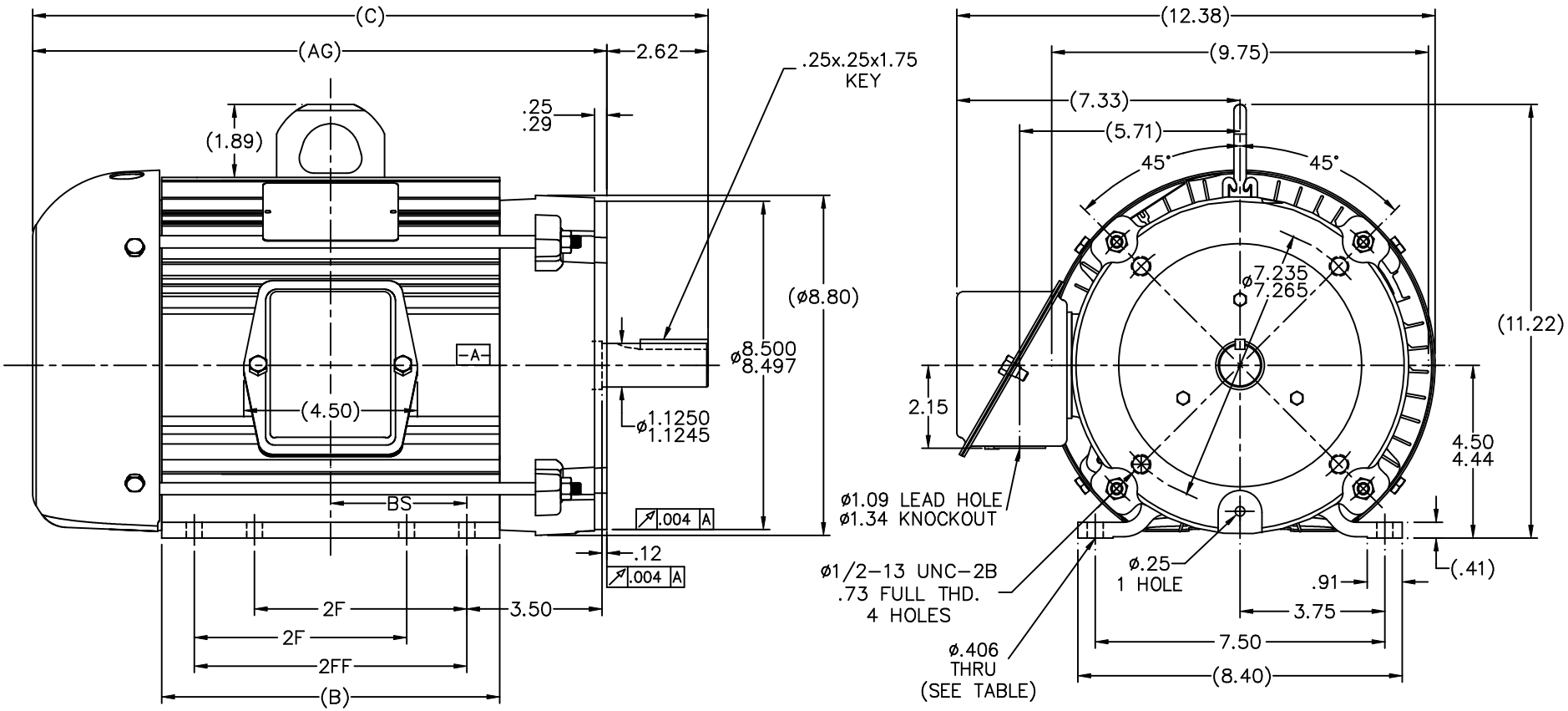

NOTES:
1. CONDUIT BOX TO BE ROTATED IN 90° STEPS.
2. NAMEPLATE TO BE READ FROM CONDUIT BOX SIDE OF MOTOR.

DASH	FR.	C	BS	B	2F	AG	2FF	FOOT HOLE
620	182T	14.83	2.25	6.20	---	12.21	4.50	4
720	184T	15.83	2.75	7.20	---	13.21	5.50	4
720	182/4T	15.83	2.75	7.20	4.50	13.21	5.50	8
820	182/4T	16.83	3.25	8.20	5.50	14.21	6.50	8
875	184T	17.49	3.53	8.75	5.50	14.87	7.06	8

NO.	REVISION	BY & DATE	CHK
10	CHANGED DASH 720 182/4T TO 184T AND DIMENSION 2FF FROM 4.50 TO 5.50 ECN 10328	JJB 05/25/2007	ML
9	-620, 720; 2F NOW 2FF DIM. (4 MTG HOLES) CN 33910	DRS 10-25-2005	ML
8	FIXED 2FF DIM. FOR -820 WAS 5.50 CN 32479	ERH 02-02-2004	ML
7	ADDED OLD DASHES TO TABLE CN 32479	ERH 12-10-2003	ML
6	REVISED PER CN 32479	ERH 12-01-2003	ML

TOLERANCES UNLESS SPECIFIED

	DEC.	INCHES
	.X	±.1
	.XX	±.03
	.XXX	±.005
	.XXXX	±.0005
	ANG	±7'30"

Lincoln MOTORS

TITLE OUTLINE
180T FR. - TEFC - C'FACE

MAT'L.
FINISH
CAD FILE ss601010ln

DRAWN BJW 02/01/2000
CHK ML 02/02/2000
APPD GK 02/02/2000
SCALE 3=8
REF
FMF MU48444
PREV

SIZE B | DRAWING NO. SS601010LN | PAGE OF | REV. 10

RFP
DIST LB

THIS DRAWING IN DESIGN AND DETAIL IS OUR PROPERTY AND MUST NOT BE USED EXCEPT IN CONNECTION WITH OUR WORK ALL RIGHTS OF DESIGN AND INVENTION ARE RESERVED
THIS IS AN ELECTRONICALLY GENERATED DOCUMENT - DO NOT SCALE THIS PRINT

EE7308T-LN

THREE PHASE DUAL VOLTAGE MOTOR

HIGH VOLTAGE

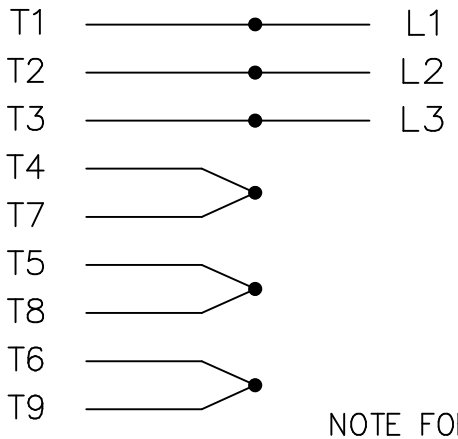

NOTE FOR FACTORY USE ONLY:
TO SURGE TEST FOR COMMON CONNECT:
HIGH VOLT: CONNECT P1 TO T1
THEN P2 TO L1
LOW VOLT: CONNECT P1 TO T1 & T7,
THEN P2 TO L1

LOW VOLTAGE

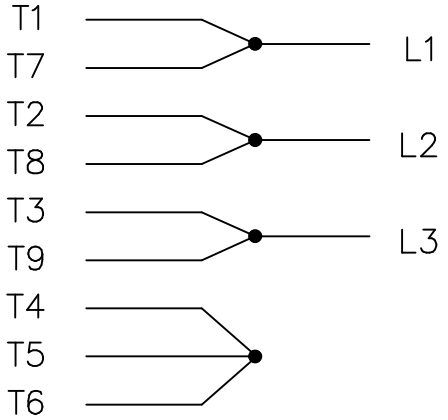

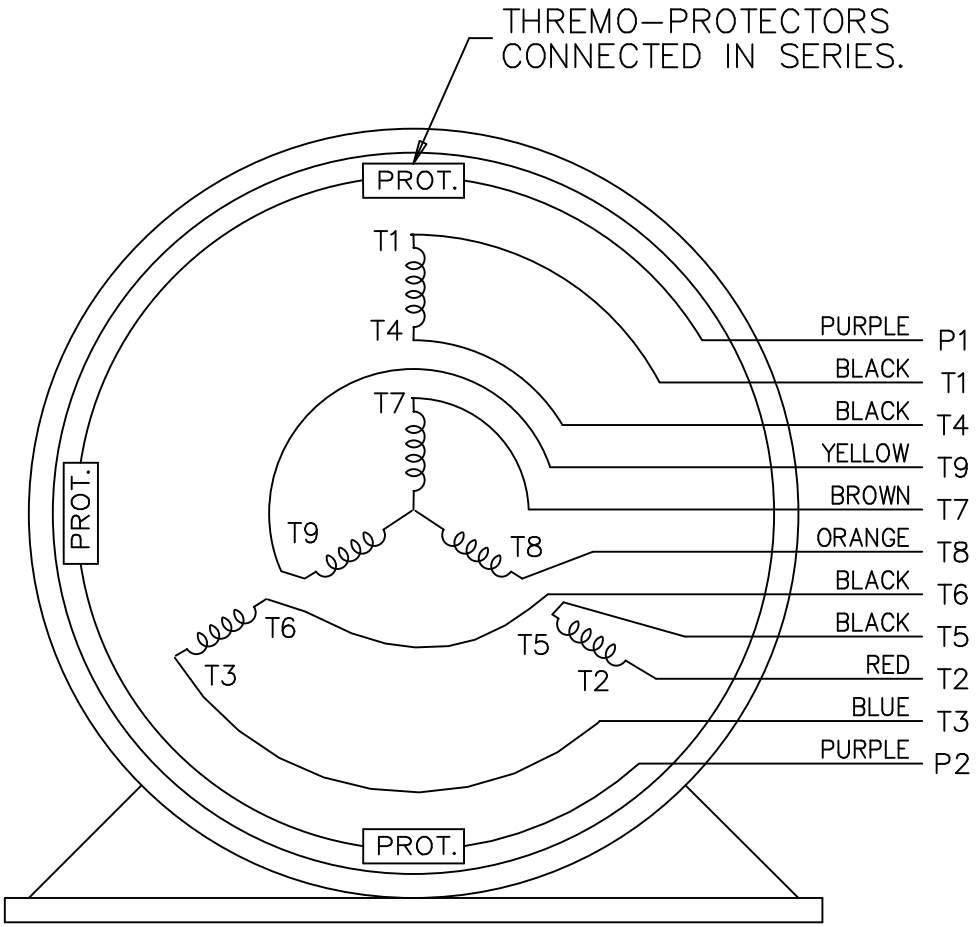

VIEW OF TERMINAL END

NO.	REVISION	BY & DATE
2	ADDED COLORS TO "T & P" LEADS CN 40494	MSG 08-08-2006
1	NEW DRAWING	BJK 07-18-2002

TOLERANCES UNLESS SPECIFIED

	DEC.	INCHES
	.X	±.1
	.XX	±.02
ML	.XXX	±.005
DRS	.XXXX	±.0005
CHK	ANG	±7'30"

Lincoln MOTORS

TITLE CONNECTION DIAGRAM
3 PHASE – DUAL VOLTAGE MOTOR

MAT'L.
FINISH
CAD FILE ee7308t_ln
RFP
DIST LB

DRAWN BJK 07-16-2002
CHK DRS 07-18-2002
APPD GK 07-18-2002
SCALE 1=1
REF
FMF
PREV

SIZE A
DRAWING NO. EE7308T-LN
PAGE OF
REV. 2

THIS DRAWING IN DESIGN AND DETAIL IS OUR PROPERTY AND MUST NOT BE USED EXCEPT IN CONNECTION WITH OUR WORK ALL RIGHTS OF DESIGN AND INVENTION ARE RESERVED
THIS IS AN ELECTRONICALLY GENERATED DOCUMENT – DO NOT SCALE THIS PRINT

Uncontrolled Copy

Data Sheet

Date: 1/29/2018

LM22830

Data @ 460 V

Motor Load Data

Load	0%	25%	50%	75%	100%	115%	125%	LR	
Current (Amps)	3.5	3.7	4.4	5.5	6.7	7.4	8.1	57.0	
Torque (ft-lb)	0.00	3.7	7.4	11.2	15.0	17.0	19.0	40.0	
RPM	1800	1790	1775	1765	1750	1,746	1740	0	
Efficiency (%)		83.0	87.5	88.5	87.5	87.0	86.5		
P.F. (%)	6.0	37.5	59.0	72.0	79.0	80.8	82.5	52.0	

Motor Speed Data

	LR	Pull-Up	BD	Rated	Idle
Speed (RPM)	0	750	1425	1750	1800
Current (Amps)	57.0	55.0	38.0	6.7	3.5
Torque (ft-lb)	40.0	40.0	61.0	15.0	0.00

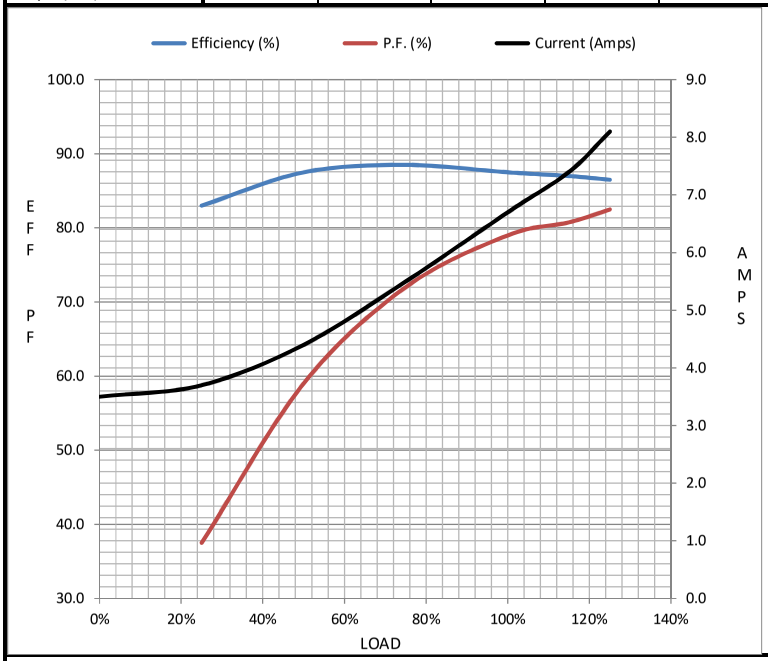

Information Block

HP	5.0	
Sync. RPM	1800	
Frame	184	
Enclosure	TEFC	
Construction	TFL	
Voltage	230/460	V
Frequency	60	Hz
Design	B	
LR Code letter	L	
Service Factor	1.0	
Temp Rise @ FL	65	° C
Duty	CONT	
Ambient	40	° C
Elevation	1,000	feet
Rotor/Shaft wk²	0.42	Lb-Ft²
Ref Wdg	K1844217 R8	
Sound Pressure @ 1M	62	dBA
VFD Rating	CONSTANT 4:1	
Outline Dwg	B-SS601010LN-820	
Conn. Diag	A-EE7308T-LN	
Additional Specifications:		
0		
0		

EQUIV CKT (OHMS / PHASE)
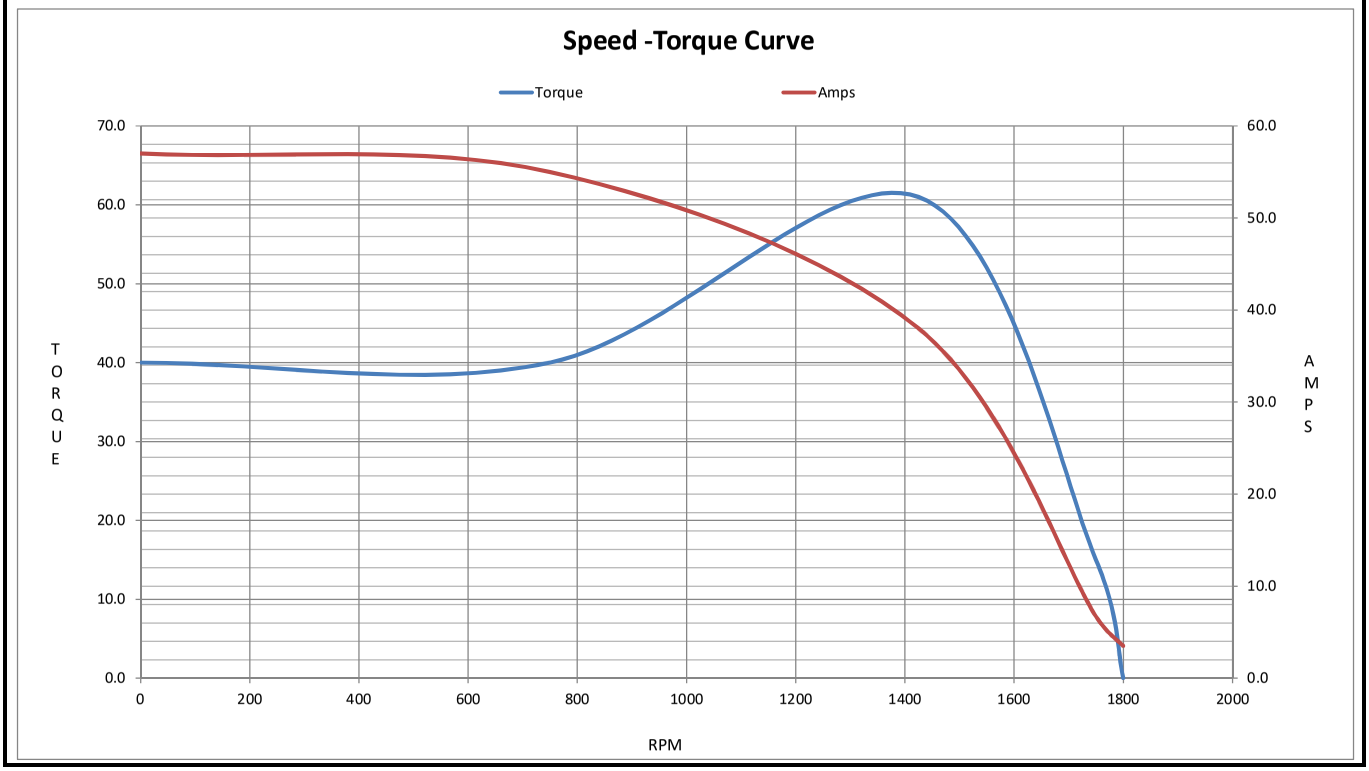
R1	R2	X1	X2	Xm
1.6900	1.1680	3.2550	4.7910	77.6790