PRODUCT INFORMATION PACKET

Model No: C6T34FZ56A

Catalog No: 117932.00

..3/4HP..3450RPM.56Y.TEFC.208-230/460VAC.3PH.60HZ.CONT.40C.1.15SF.2-BOLT SAE A.C6T34FZ56.....NONE.....

Hydraulic

Regal and Leeson are trademarks of Regal Beloit Corporation or one of its affiliated companies.
©2018 Regal Beloit Corporation, All Rights Reserved. MC017097E

Nameplate Specifications

Output HP	**0.75 Hp**	Output KW	**0.56 kW**
Frequency	**60 Hz**	Voltage	**208-230/460 V**
Current	**2.5-2.4/1.2 A**	Speed	**3450 rpm**
Service Factor	**1.15**	Phase	**3**
Efficiency	**75.5 %**	Duty	**Continuous**
Insulation Class	**F**	Design Code	**B**
KVA Code	**J**	Frame	**56YZ**
Enclosure	**Totally Enclosed Fan Cooled**	Overload Protector	**No**
Ambient Temperature	**40 °C**	Drive End Bearing Size	**6206**
Opp Drive End Bearing Size	**6203**	UL	**Recognized**
CSA	**Y**	CE	**N**
IP Code	**43**		

Technical Specifications

Electrical Type	**Squirrel Cage Inverter Rated**	Starting Method	**Line Or Inverter**
Poles	**2**	Rotation	**Reversible**
Mounting	**Rigid base**	Motor Orientation	**HORIZONTAL**
Drive End Bearing	**BALL**	Opp Drive End Bearing	**BALL**
Frame Material	**Rolled Steel**	Shaft Type	**Single Special Extension**
Overall Length	**8.50 in**	Frame Length	**5.00 in**
Shaft Diameter	**1.187 in**	Shaft Extension	**1 in**
Assembly/Box Mounting	**F1 ONLY**		
Outline Drawing	**607-0364-500**	Connection Diagram	**005010.01**

This is an uncontrolled document once printed or downloaded and is subject to change without notice. Date Created: 10/15/2018

Uncontrolled Copy

EXTERNAL INVOLUTE SPLINE DATA	
FLAT ROOT SIDE FIT -- CLASS 5 FIT	
NUMBER OF TEETH	9
SPLINE PITCH	16/32
PRESSURE ANGLE	30°
BASE DIAMETER	.4871 REF
PITCH DIAMETER	.5625 REF
MAJOR DIAMETER	.651 MAX
FORM DIAMETER	.629
MINOR DIAMETER	.509 / .514
CIRCULAR SPACE WIDTH	
MAX EFFECTIVE	.0982
MIN ACTUAL	.1008
MAX MESAUREMENT BETWEEN PINS	.399 / .401
PIN DIAMETER	∅.108
ANSI B92.1-1996 PROVISIONS APPLY	

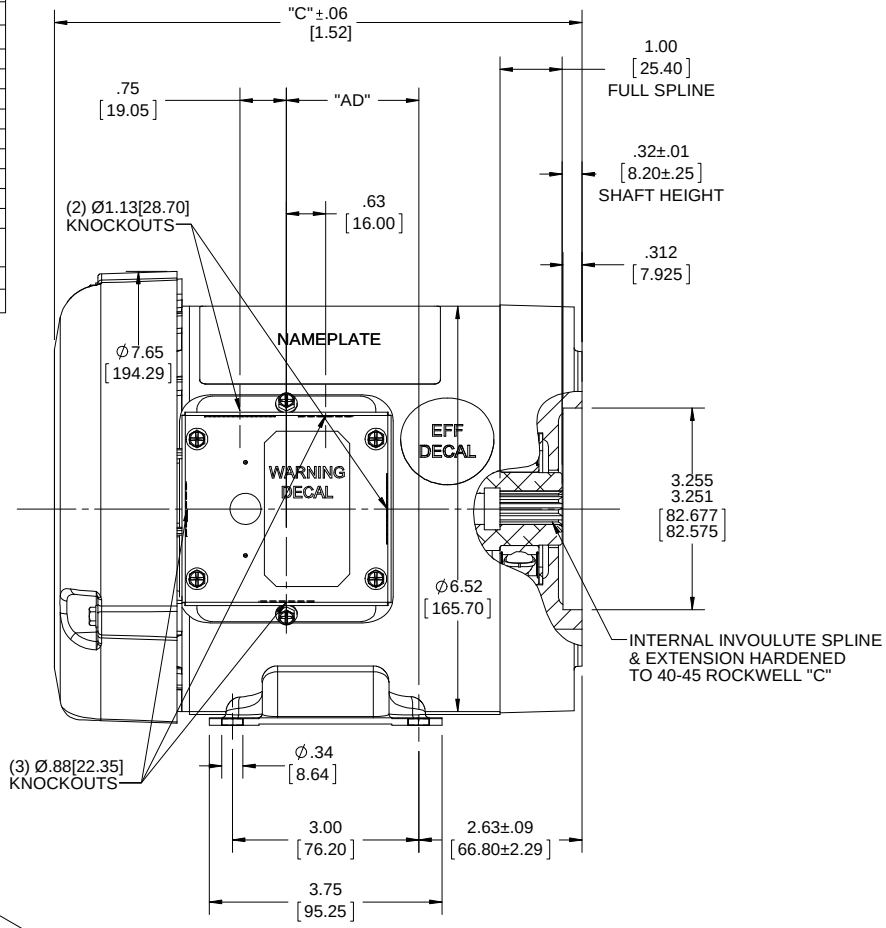

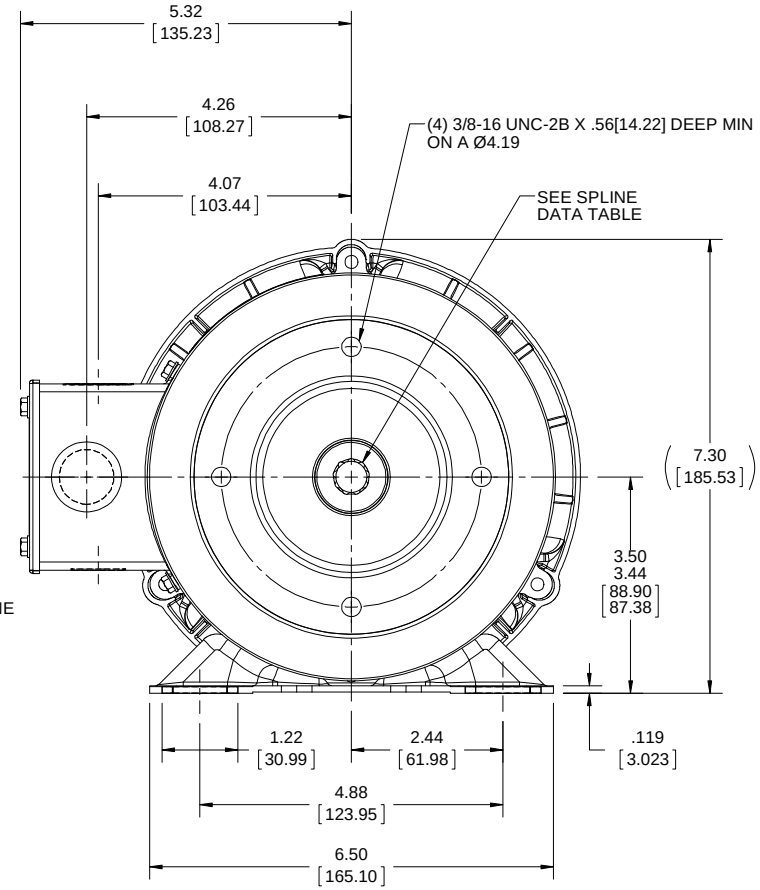

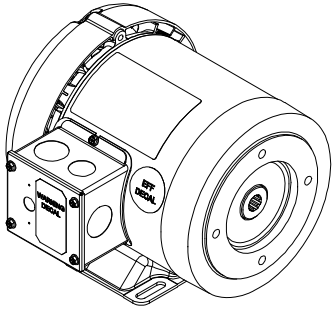

DASH NO.	"C"	"AD"
500	8.49[215.64]	2.13[54.10]

NOTE:
1. BASE & MOUNTING TAPS TO BE SQUARE & PARALLEL TO EACH OTHER ±.03 MAX.
2. GASKETS THROUGHOUT.

DRAWING REVISION	REVISION BY	DATE
A		
ECO	APPROVED BY	DATE
ECO-0148826		

ECO DESCRIPTION
OUTLINE CONVERSION PROJECT

COPYRIGHT REGAL BELOIT AMERICA, INC. ALL RIGHTS RESERVED.
PROPRIETARY AND CONFIDENTIAL INFORMATION - THIS DOCUMENT IS THE PROPERTY OF REGAL BELOIT AMERICA, INC. ("OWNER") AND CONTAINS OWNER'S PROPRIETARY INFORMATION. ANY PERSON, CORPORATION OR OTHER FIRM RECEIVING IT IS DEEMED, BY RECEIVING IT, TO AGREE THAT IT, AND/OR ANY PART OF IT, SHALL NOT BE DISCLOSED TO ANY PERSON, CORPORATION OR OTHER ENTITY, DUPLICATED, AND/OR USED, EXCEPT AS EXPRESSLY APPROVED IN WRITING IN ADVANCE BY OWNER. THIS DOCUMENT SHALL BE RETURNED TO OWNER UPON REQUEST. IT MAY BE SUBJECT TO CERTAIN RESTRICTIONS UNDER APPLICABLE EXPORT CONTROL LAWS AND REGULATIONS.

TOLERANCES UNLESS OTHERWISE SPECIFIED:

DEC.	INCH	mm	ANGLE
.X	±0.1	[±2.5]	±0.5°
.XX	±0.01	[±0.25]	
.XXX	±0.005	[±0.127]	
.XXXX	±0.0005	[±0.0127]	

REMOVE BURRS & BREAK SHARP EDGES: .003/.015 [.076/.381] X 45°
CORNER FILLETS: R.02 [.51]
MACHINED SURFACES: 125/ INCH 3.2/ mm
mm SHOWN IN [BRACKETS]

DRAWN BY	A. KEETHA
DATE	04/11/2018
APPROVED BY	PK
DATE	07/16/2018
REFERENCE	607-0159
THIRD ANGLE PROJECTION	

Regal Beloit America, Inc.

DESCRIPTION
OUTLINE
T.E.F.C-RIGID-SAE A 2-BOLT PUMP

MATERIAL | PROCESS/FINISH

SIZE	DRAWING NUMBER	SHEET
B	607-0364	1 OF 1

Uncontrolled Copy

005010–01

VIEW FROM OUTSIDE OF MOTOR AT SWITCH END.

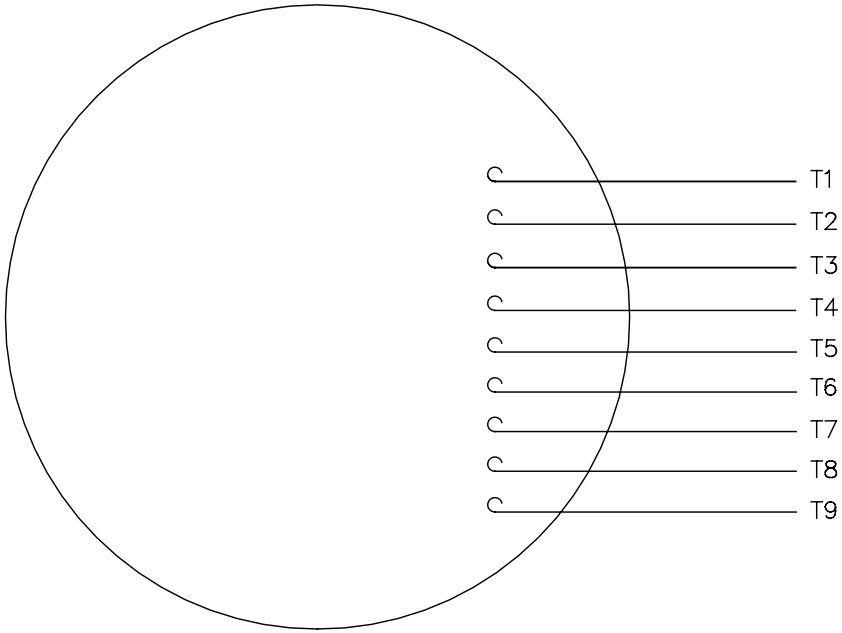

LINE LEADS

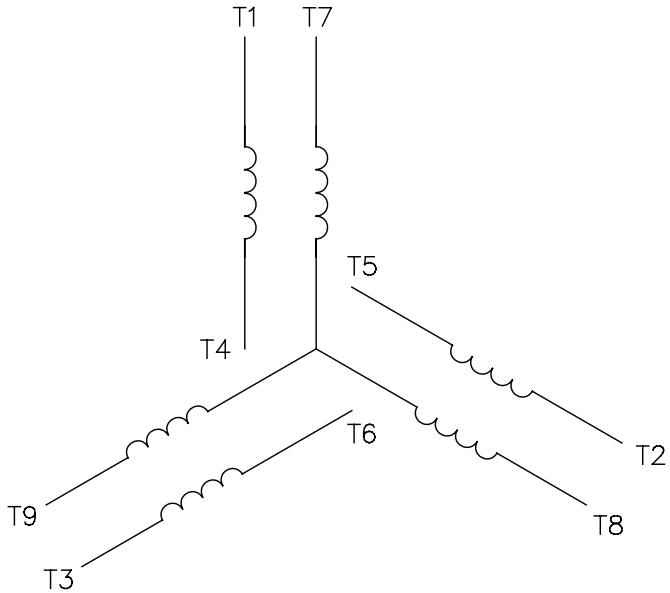

VOLTAGE	L1	L2	L3	JOIN & INSULATE
HIGH	T1	T2	T3	(T4,T7) (T5,T8) (T6,T9)
LOW	T1,T7	T2,T8	T3,T9	T4,T5,T6

NO.	REVISION	BY & DATE	CHK
A	UPDATED TO REGAL LOGO	SAJ 06/26/15	AJY

TOLERANCES UNLESS SPECIFIED

DEC.	INCHES
.X	±.1
.XX	±.01
.XXX	±.005
.XXXX	±.0005
ANG	±1/2°

REGAL™ Regal Beloit America, Inc.

TITLE: EXTERNAL WIRING DIAGRAM 3 PHASE W/O PROTECTOR

MAT'L. DECAL – 004014

FINISH

DRAWN RDW 04/12/02
CHK
APPD
SCALE 1=1
REF FIG.2–51
FMF
PREV

RFP 04/12/02
DIST BRF–NLV
CAD FILE 00501001
SIZE A
DRAWING NO. 005010–01
REV. A

THIS DRAWING IN DESIGN AND DETAIL IS OUR PROPERTY AND MUST NOT BE USED EXCEPT IN CONNECTION WITH OUR WORK ALL RIGHTS OF DESIGN AND INVENTION ARE RESERVED
THIS IS AN ELECTRONICALLY GENERATED DOCUMENT – DO NOT SCALE THIS PRINT

Uncontrolled Copy

Data Sheet

Date: 1/29/2018

117932.00

Data @ 460 V

Motor Load Data

Load	0%	25%	50%	75%	100%	115%	125%	LR	
Current (Amps)	0.75	0.78	0.88	1.02	1.19	1.30	1.40	7.3	
Torque (ft-lb)	0.00	72.2	144	218	294	5,343	372	738	
RPM	3600	3559	3528	3492	3454	3,436	3410	0	
Efficiency (%)		53.9	68.3	73.5	75.6	75.8	75.9		
P.F. (%)	17.6	42.5	58.9	70.6	78.4	80.7	83.0	0.0	

Motor Speed Data

	LR	Pull-Up	BD	Rated	Idle
Speed (RPM)	0	400	2600	3454	3600
Current (Amps)	7.3	6.7	4.4	1.19	0.75
Torque (ft-lb)	738	706	1,043	294	0.00

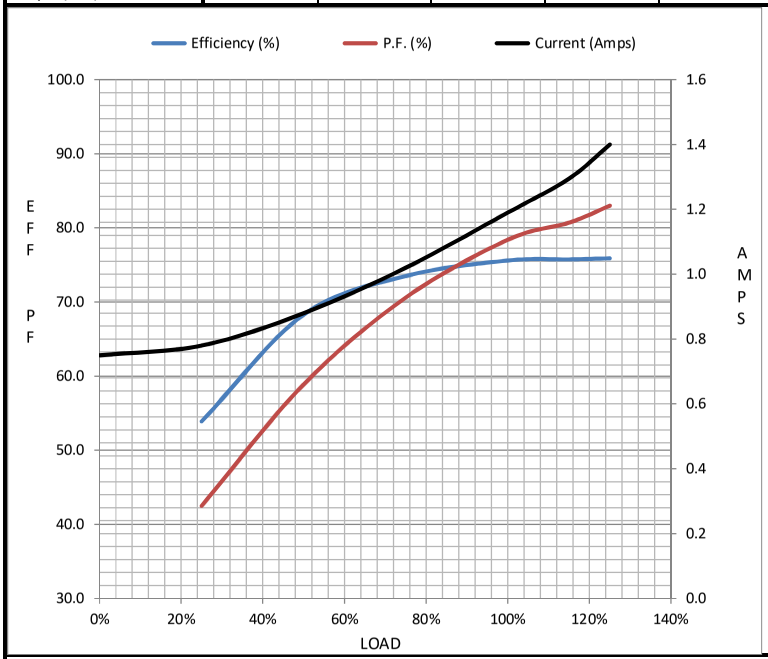

Information Block

HP	0.8	
Sync. RPM	3600	
Frame	140	
Enclosure	TEFC	
Construction	TFR	
Voltage	208-230/460	V
Frequency	60	Hz
Design	B	
LR Code letter	J	
Service Factor	1.15	
Temp Rise @ FL	57	° C
Duty	CONT	
Ambient	40	° C
Elevation	1,000	feet
Rotor/Shaft wk²	0.02	Lb-Ft²
Ref Wdg	T632160 FR	
Sound Pressure @ 1M	0	dBA
VFD Rating	CONSTANT 10:1	
Outline Dwg	607-0159-500	
Conn. Diag	005010.01	

Additional Specifications:

0

0

EQUIV CKT (OHMS / PHASE)
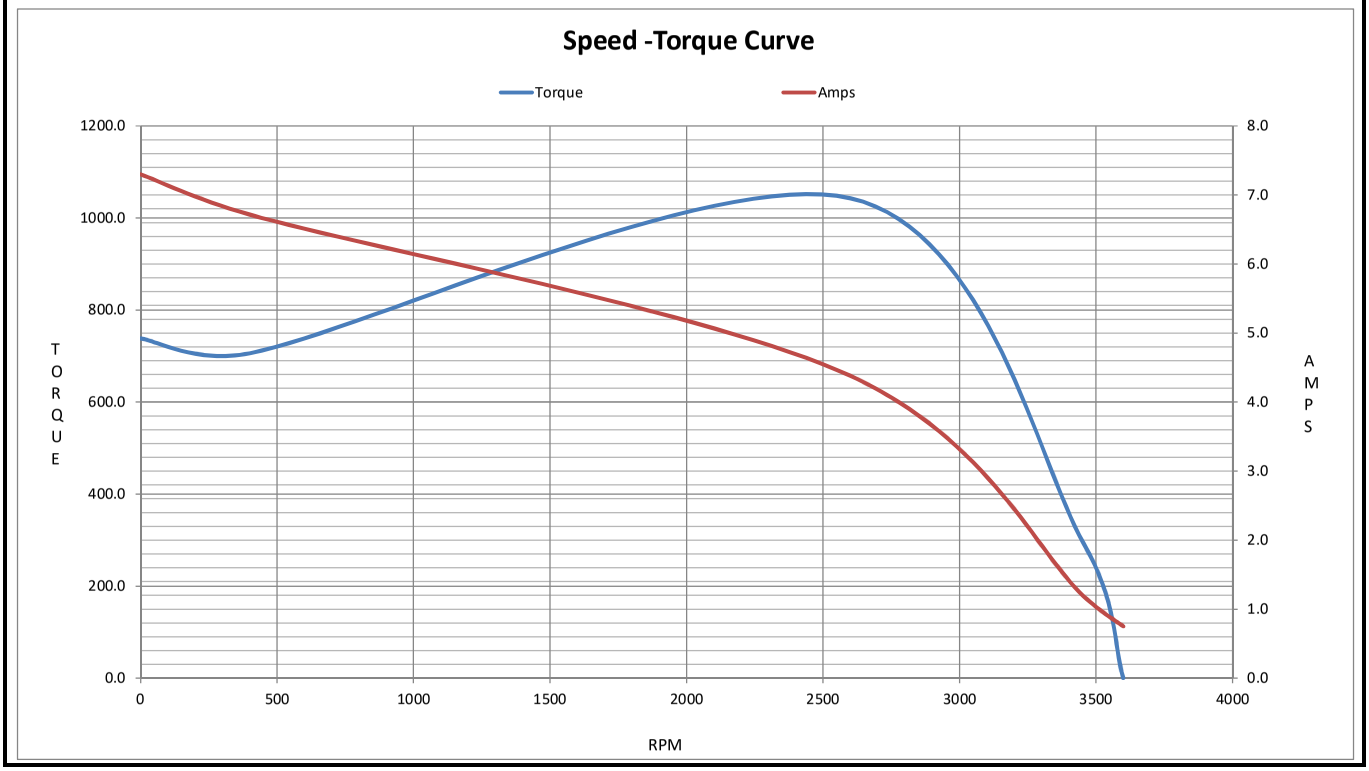
R1	R2	X1	X2	Xm
0.0000	0.0000	0.0000	0.0000	0.0000