12LYG214

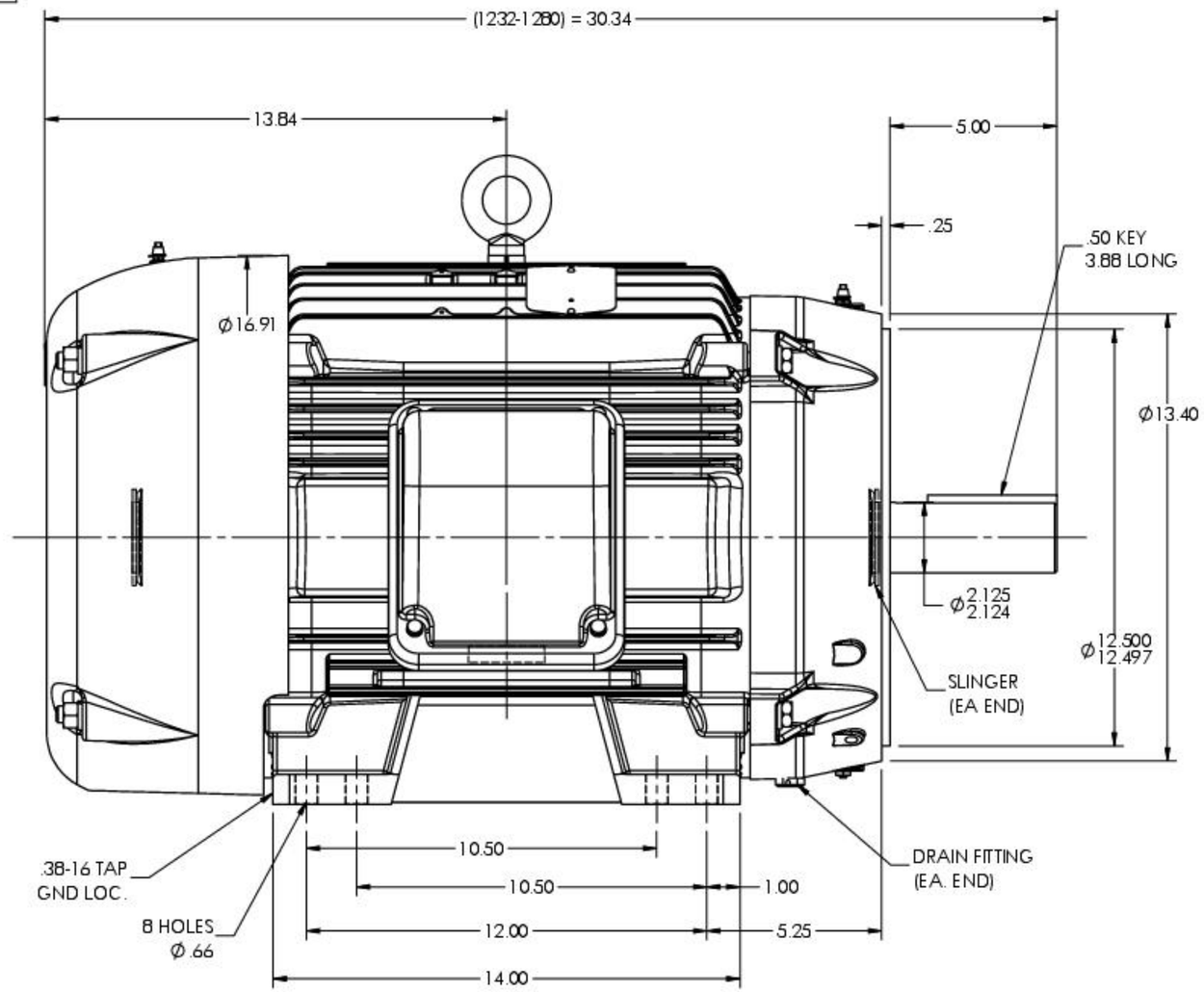

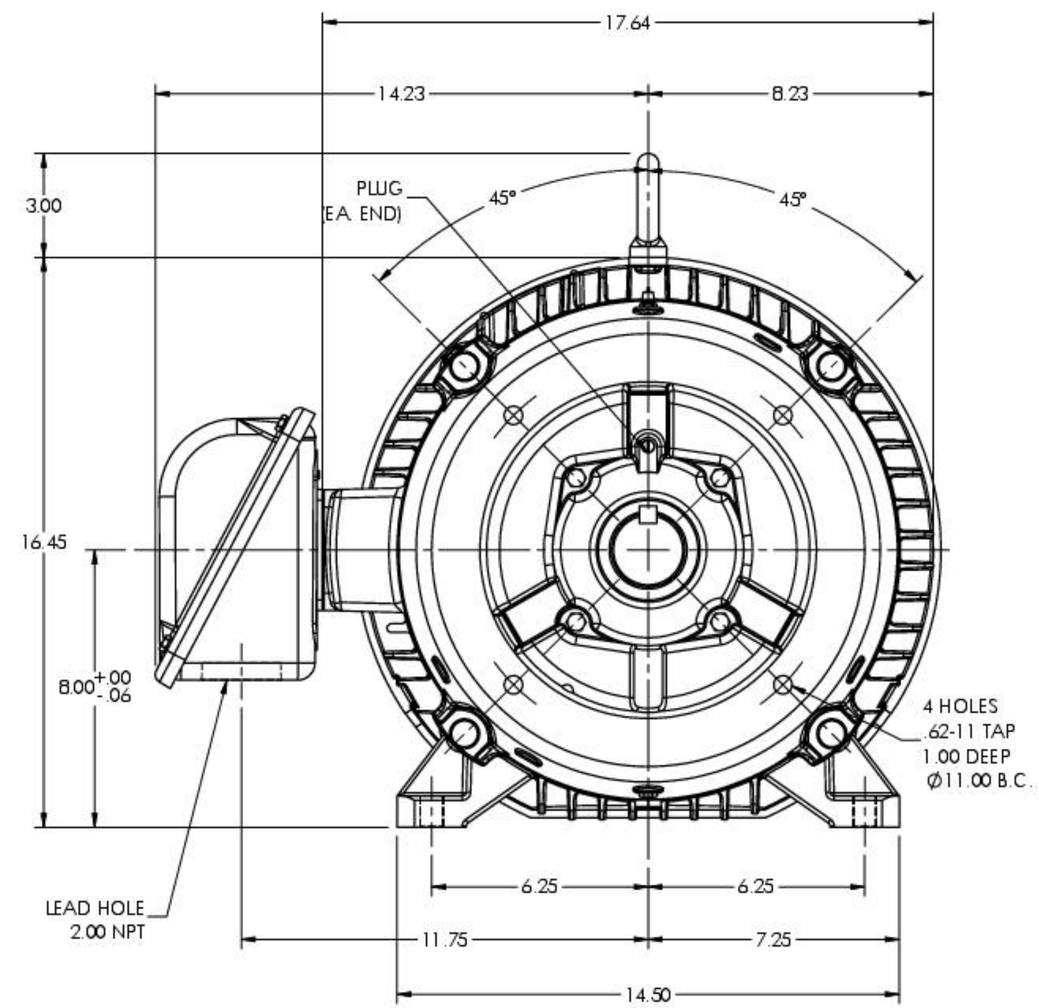

CUSTOMER IS RESPONSIBLE FOR DETERMINING THAT THE PRODUCT WILL PERFORM SUITABLY IN THE INTENDED APPLICATION

REV. DESC: CONVERT FROM AUTOCAD TO SWD			
REV: E	VERSION: 05	REVISED: 12:26:59 10/20/2023	TDR: 000001218940
MODEL NO. 12LYG214			REF: -
BY: USALMAZ			B

BALDOR - RELIANCE®

HORZ TEFC 324-6TC ECP W/312 BRGS & PLS

12LYG214