617427-004

DUTY MASTER ALTERNATING CURRENT MOTORS

SQUIRREL-CAGE INDUCTION

ENCLOSURE: TOTALLY ENCLOSED

FRAME G445TS ABOVE NEMA RATINGS

COOLING: FAN COOLED

MOUNTING: FOOT

INCLUDES 444TS FRAME MOUNTING HOLES

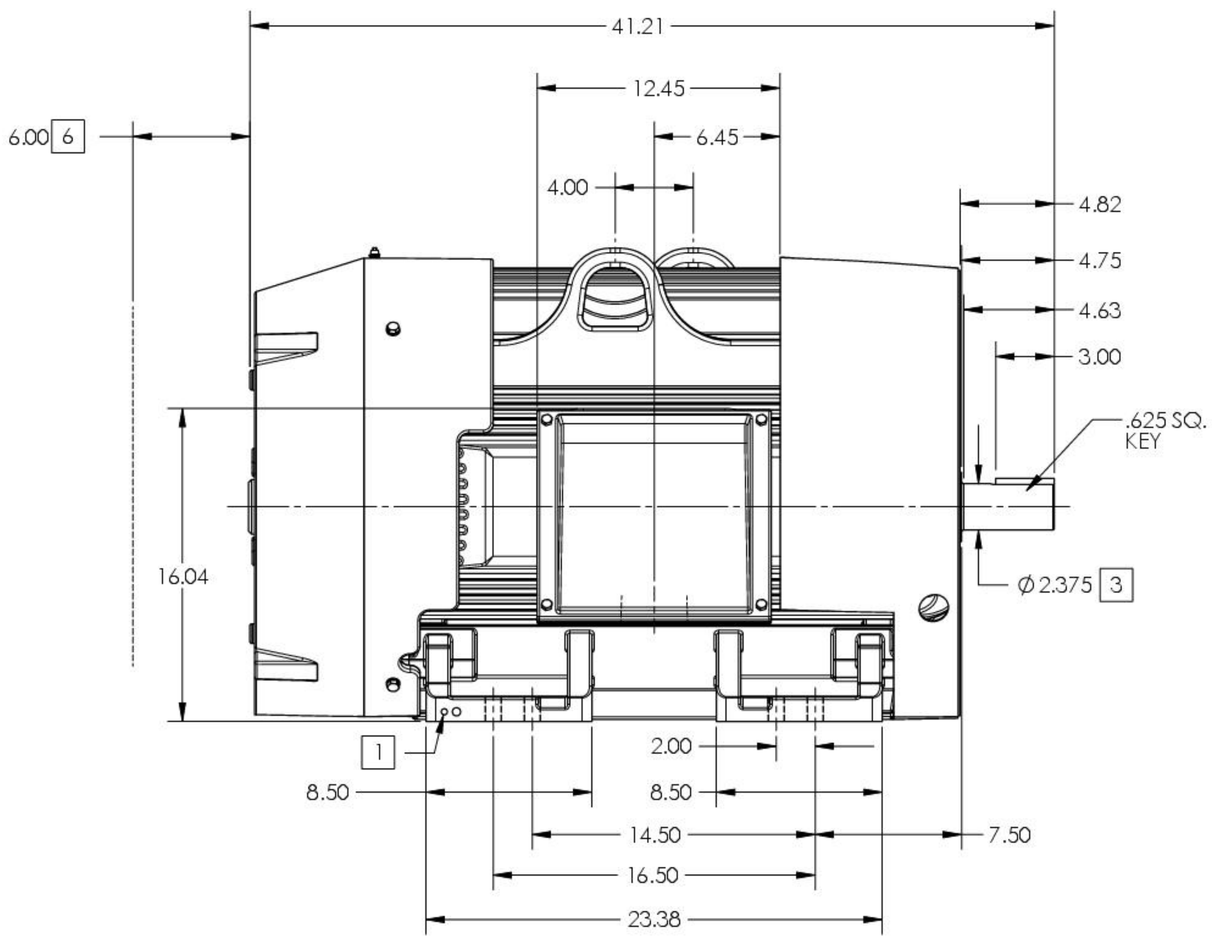

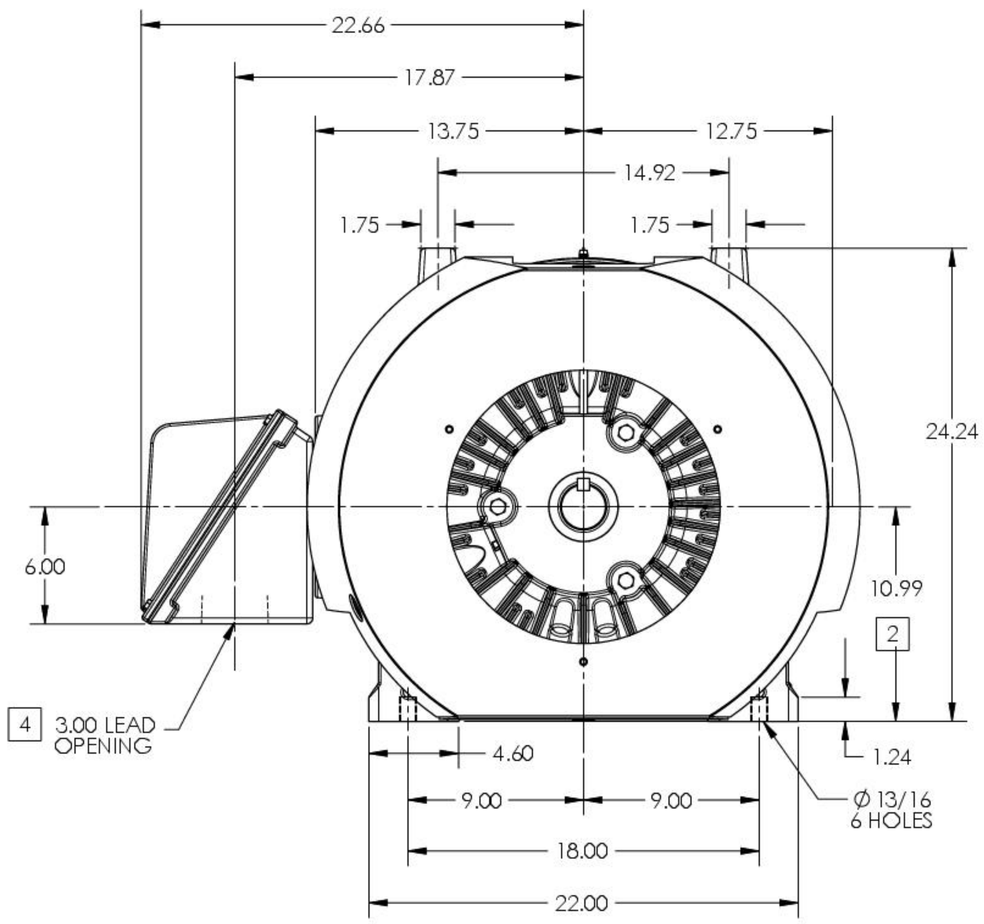

1. GROUND HOLES QTY 1 1/2-13 TAP; QTY 1 3/8-16 TAP
2. VARIES +.00,-.06
3. VARIES +.000,-.001
4. ON STANDARD MOTORS THIS IS CONDUIT SIZE. ON XT AND CORROSION PROOF MOTOR THIS IS PIPE TAP.
5. MOTOR WEIGHTS MAY VARY BY 15% DEPENDING ON RATING.
6. OBSTRUCTION MUST NO ENCROACH ON AIR INLET

CONDUIT BOX LOCATED ON OPPOSITE SIDE WHEN F-2.
IF MOUNTING CLEARANCE DETAILS ARE REQUIRED, CONSULT FACTORY.
MAXIMUM PERMISSIBLE SHAFT RUNOUT WHEN MEASURED AT END OF STANDARD SHAFT EXTENSION IS .003"T.I.R. TO 5 INCH DIA.

5 WEIGHT (LBS): 2100

DRIVE END AIR DEFLECTOR IS ONLY INCLUDED WHEN NECESSARY.

DIMENSIONS ARE IN INCHES; SEE SHEET 2 FOR DIMENSIONS IN MILLIMETERS

CUSTOMER IS RESPONSIBLE FOR DETERMINING THAT MOTOR PERFORMANCE IS SUITABLE IN THE APPLICATION.

SHEET NUMBER
1 OF 2

617427-004

REV. DESC: CHANGE SHAFT TO 611752-601			
REV: E	VERSION: 05	REVISED: 01:13:35 02/02/2024	TDR: 000001225091
MODEL NO. 617427-004			REF:
BY: USBUFRA	Material:		C

BALDOR

G445TS/444TS STD – FOOTED – SIDE/CENTER C/B

617427-004