39LYK070

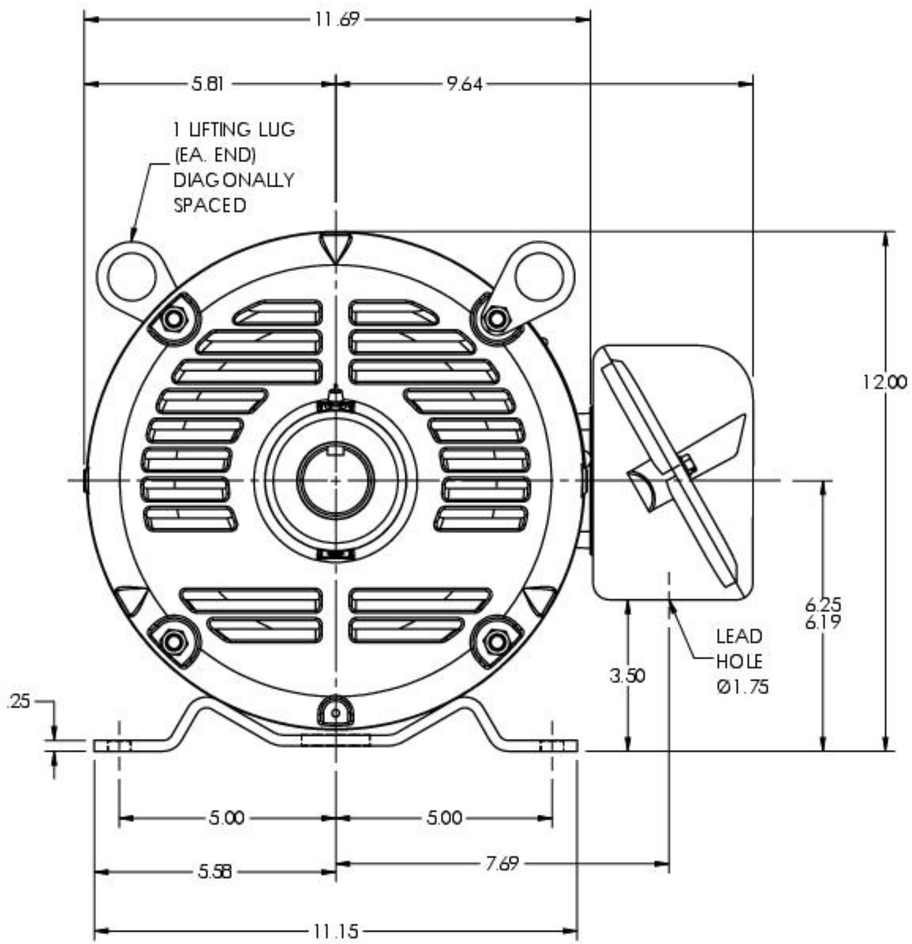

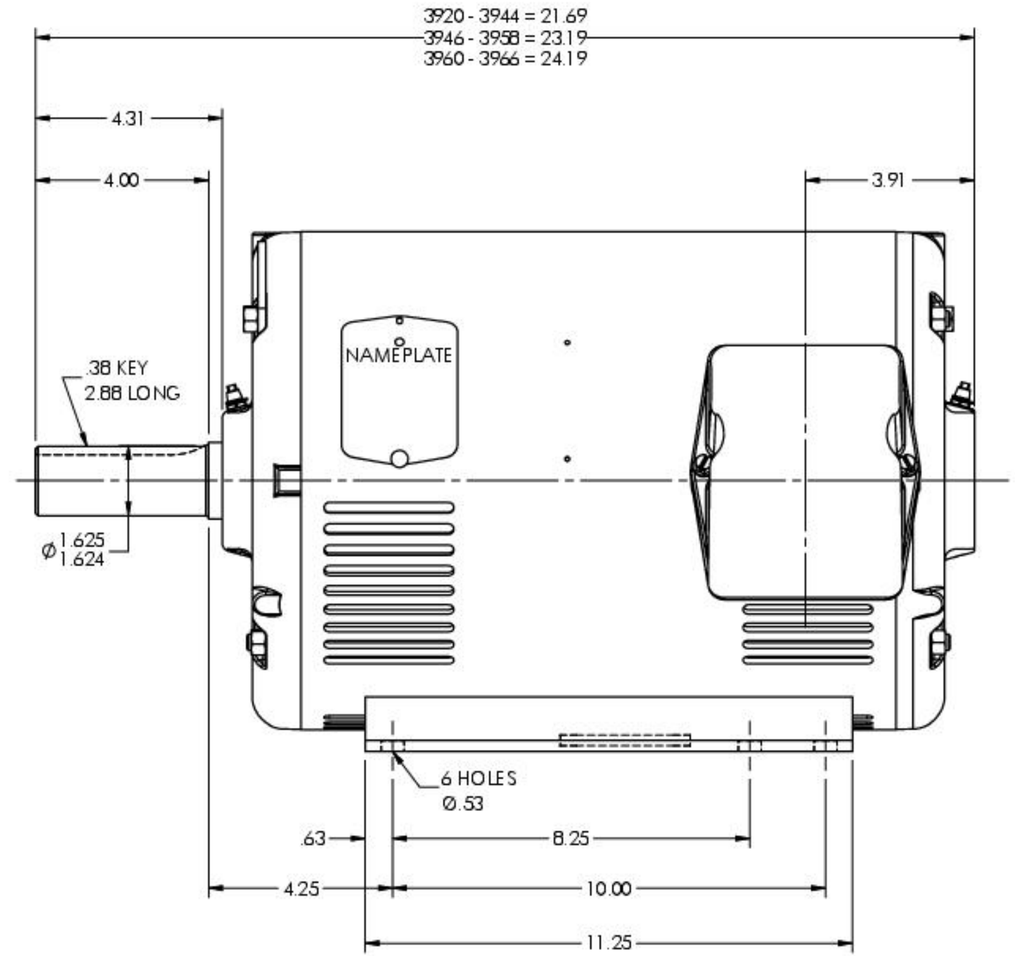

CUSTOMER IS RESPONSIBLE FOR DETERMINING THAT THE PRODUCT WILL PERFORM SUITABLY IN THE INTENDED APPLICATION

REV. DESC: 09CB3003 WAS '3002(LIFE-CYCLE)			
REV: H	VERSION: 06	REVISED: 11:18:37 04/29/2021	TDR: 000001166574
MODEL NO. 39LYK070			REF: -
BY: ENFRAJO			B

BALDOR - RELIANCE®

HORZ OPSB 254-6T F2

39LYK070