34LYF351

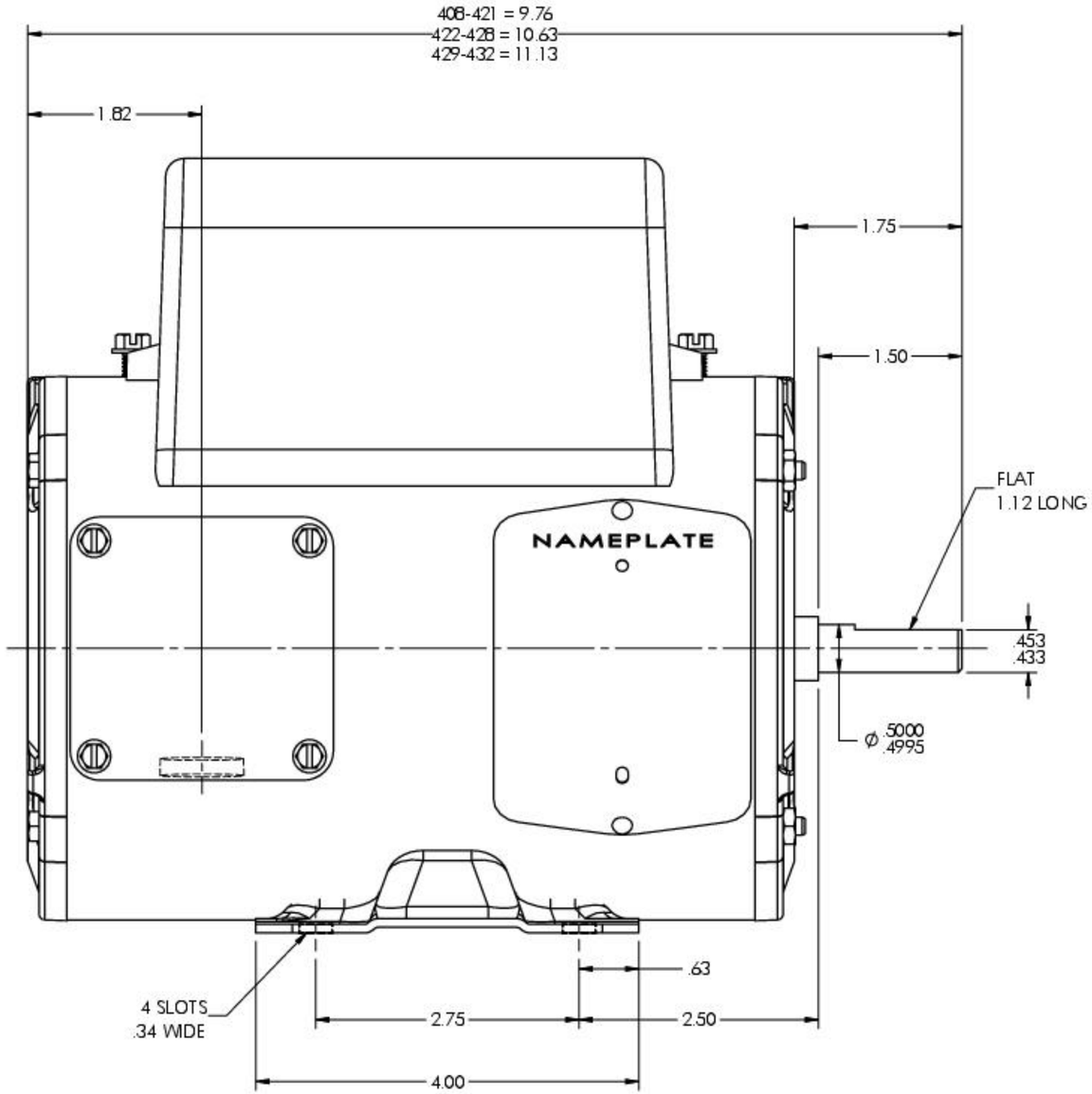

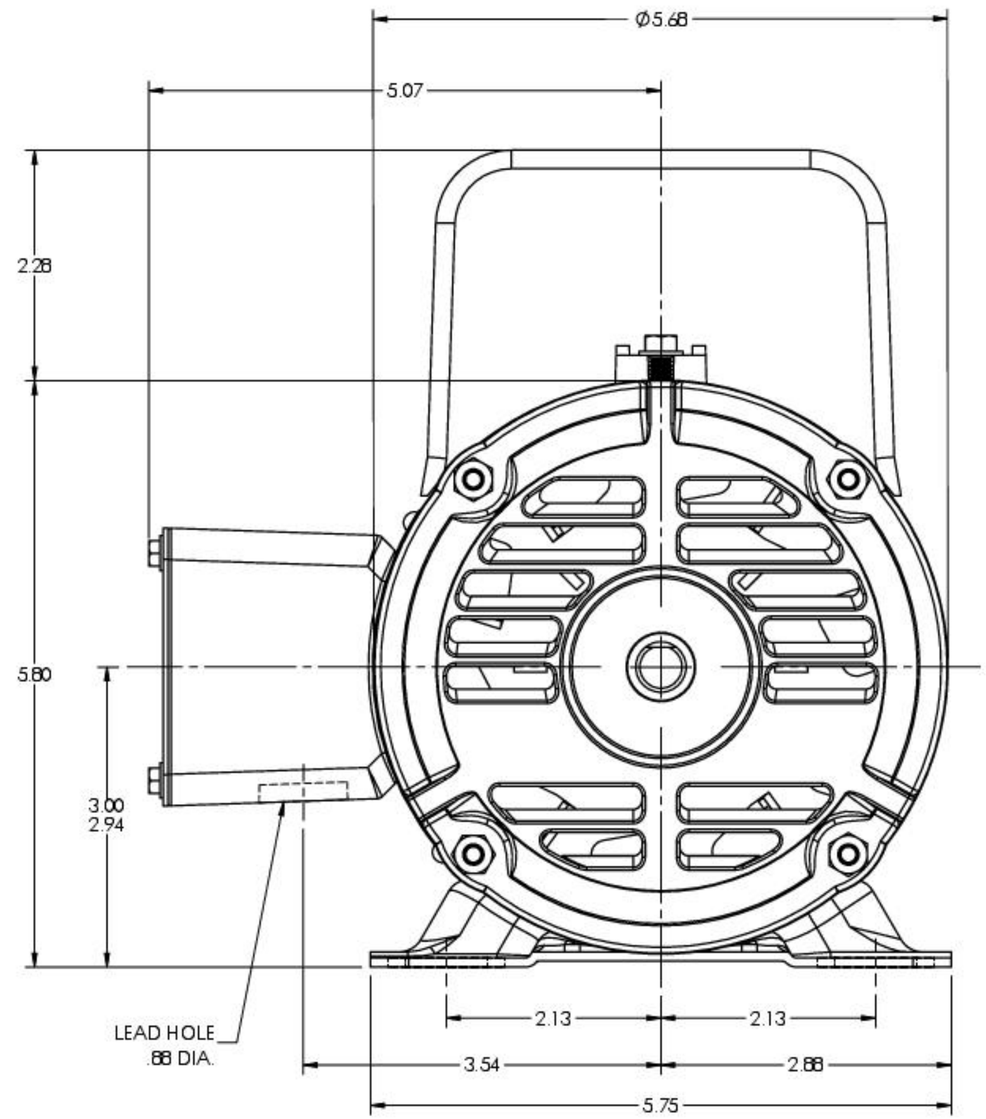

CUSTOMER IS RESPONSIBLE FOR DETERMINING THAT THE PRODUCT WILL PERFORM SUITABLY IN THE INTENDED APPLICATION

REV. DESC: CONVERT FROM AUTOCAD TO SWD				BALDOR - RELIANCE®
REV: D	VERSION: 03	REVISED: 12:54:01 10/17/2023	TDR: 000001218663	
MODEL NO. 34LYF351			REF: -	STD HOR 34LC NEMA 48OPEN
BY: USALMAZ			B	

34LYF351