34LYF353

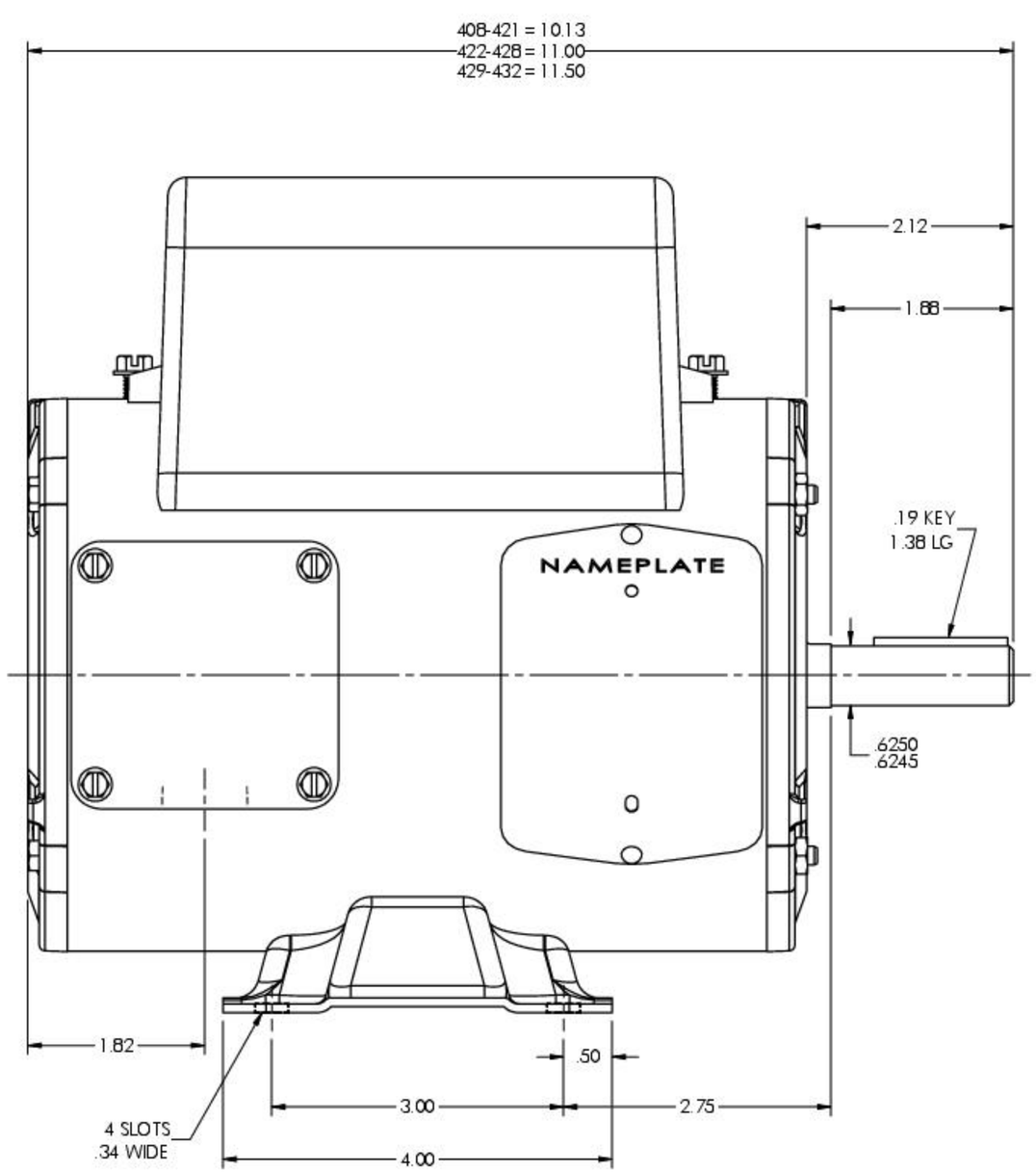

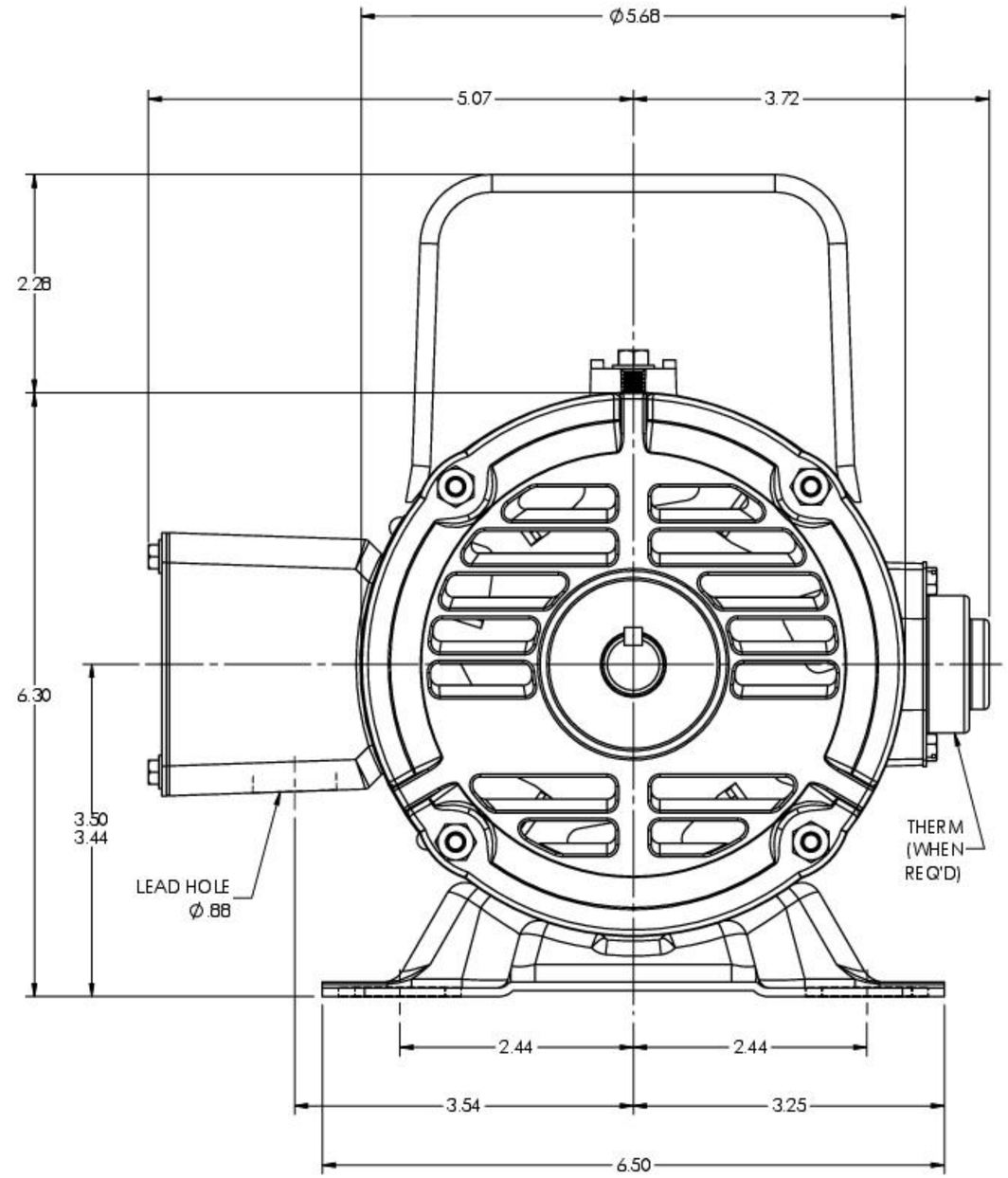

CUSTOMER IS RESPONSIBLE FOR DETERMINING THAT THE PRODUCT WILL PERFORM SUITABLY IN THE INTENDED APPLICATION

REV. DESC: ADD THERMAL BACK TO DRAWING			
REV: F	VERSION: 05	REVISED: 03:04:56 03/26/2024	TDR: 000001228830
MODEL NO. 34LYF353			REF: -
BY: ENJEFDO			B

BALDOR - RELIANCE®

STD HOR 34LC 56 OPEN

34LYF353