36LYG271

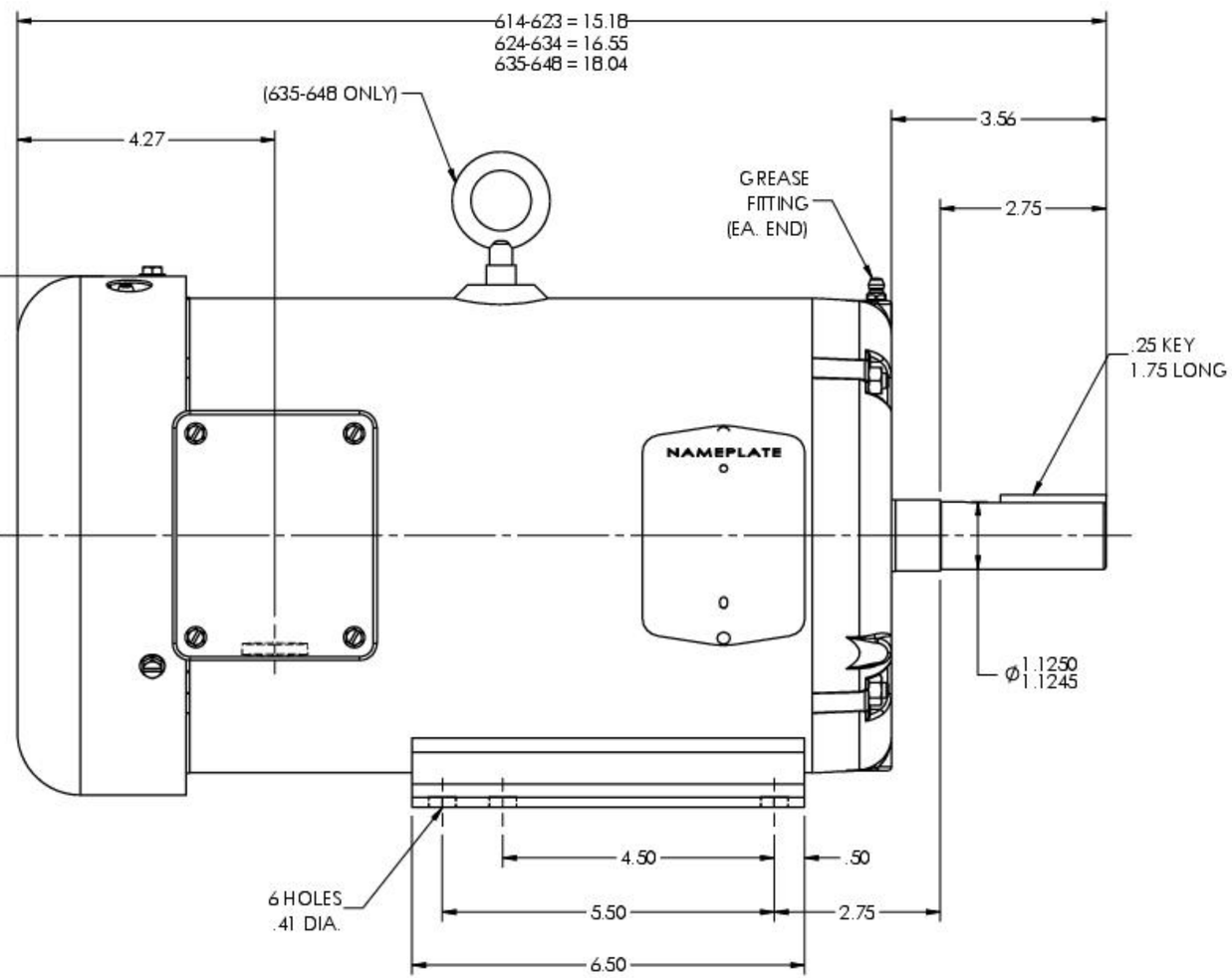

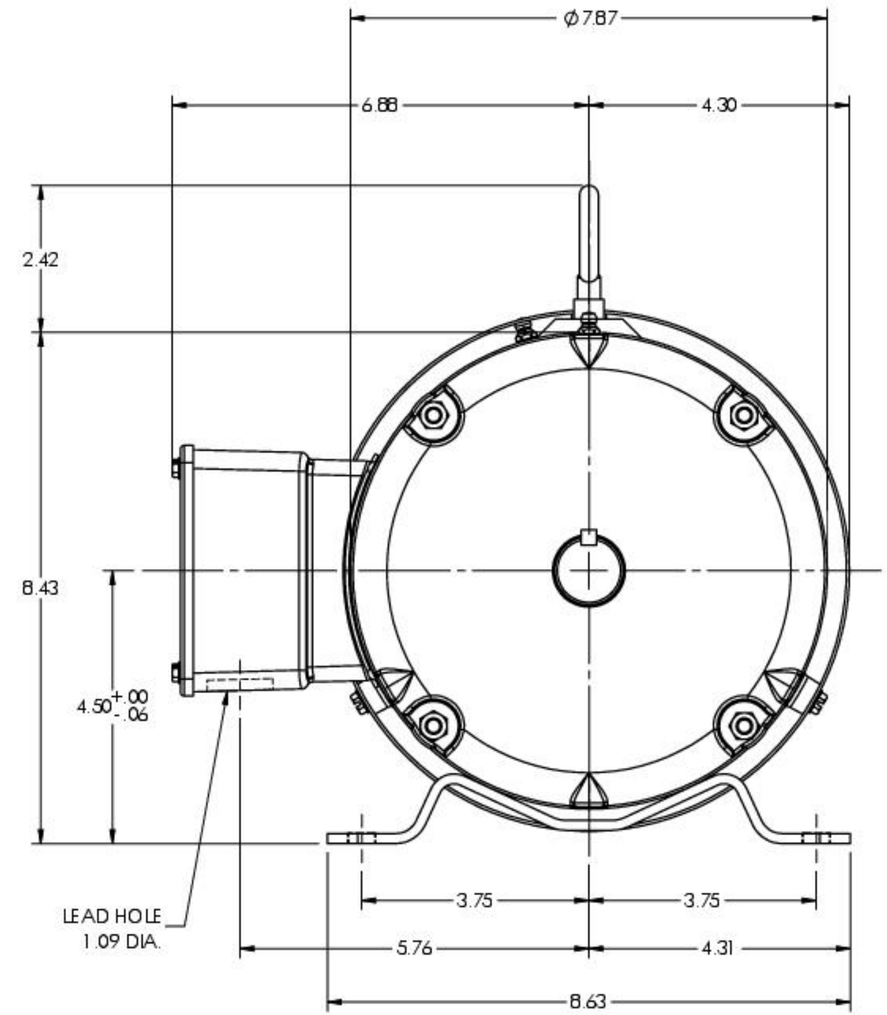

CUSTOMER IS RESPONSIBLE FOR DETERMINING THAT THE PRODUCT WILL PERFORM SUITABLY IN THE INTENDED APPLICATION

REV. DESC: CONVERT AUTOCAD DRW TO SWD DRW			
REV: L	VERSION: 07	REVISED: 10:39:20 02/02/2023	TDR: 000001203217
MODEL NO. 36LYG271			REF: -
BY: ENALEMO			B

BALDOR - RELIANCE®

STD HORZ 182-4T TEFC 36M SUPER-E

36LYG271