37LYH244

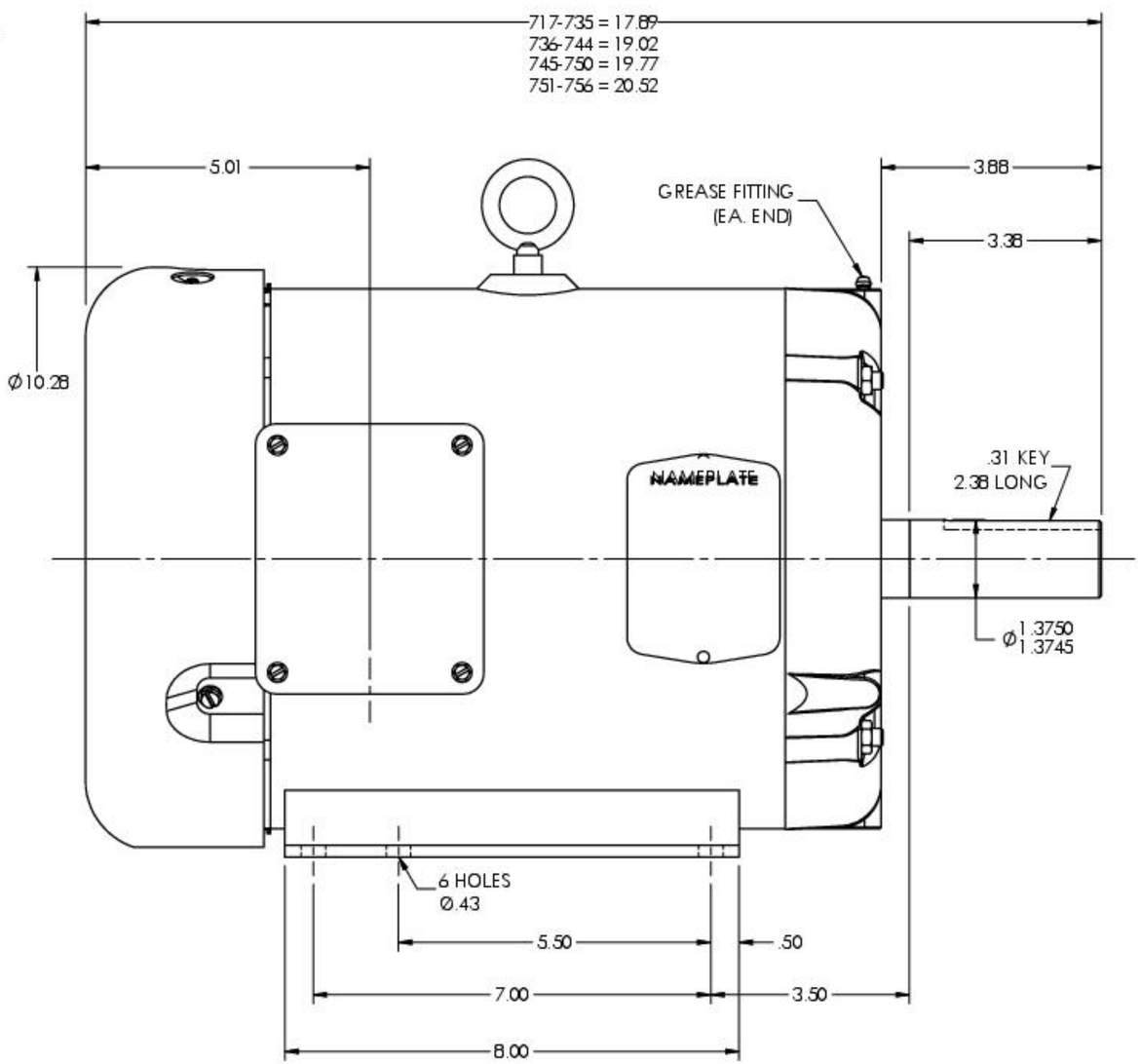

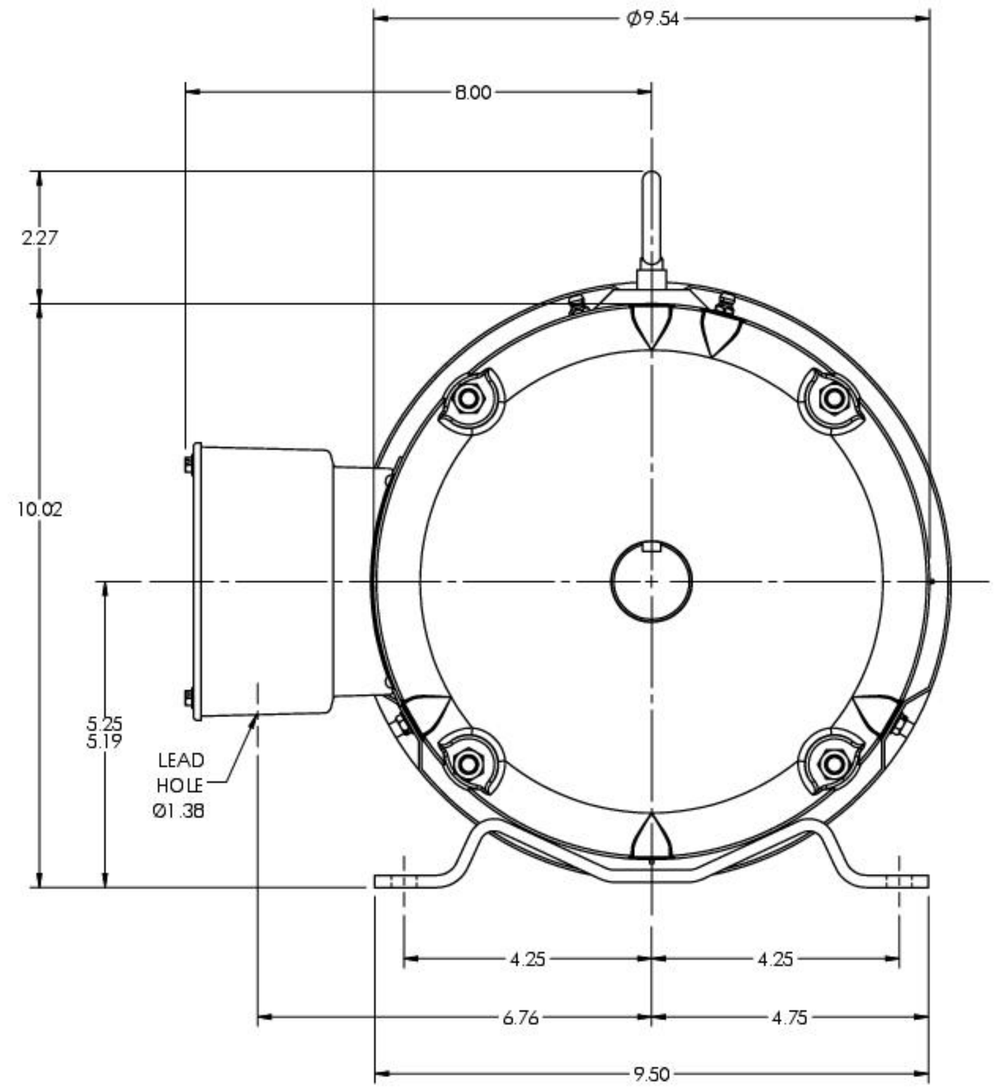

CUSTOMER IS RESPONSIBLE FOR DETERMINING THAT THE PRODUCT WILL PERFORM SUITABLY IN THE INTENDED APPLICATION

REV. DESC: CONVERSION OF ACAD TO SWD INOPC PKG 19			
REV: F	VERSION: 03	REVISED: 10:46:05 10/11/2022	TDR: 000001197758
MODEL NO. 37LYH244			REF: -
BY: ENALEMO			B

BALDOR - RELIANCE®

HORZ 213-5T TEFC 37M, EPACT SHOVE, SUPER E

37LYH244