10LYC151

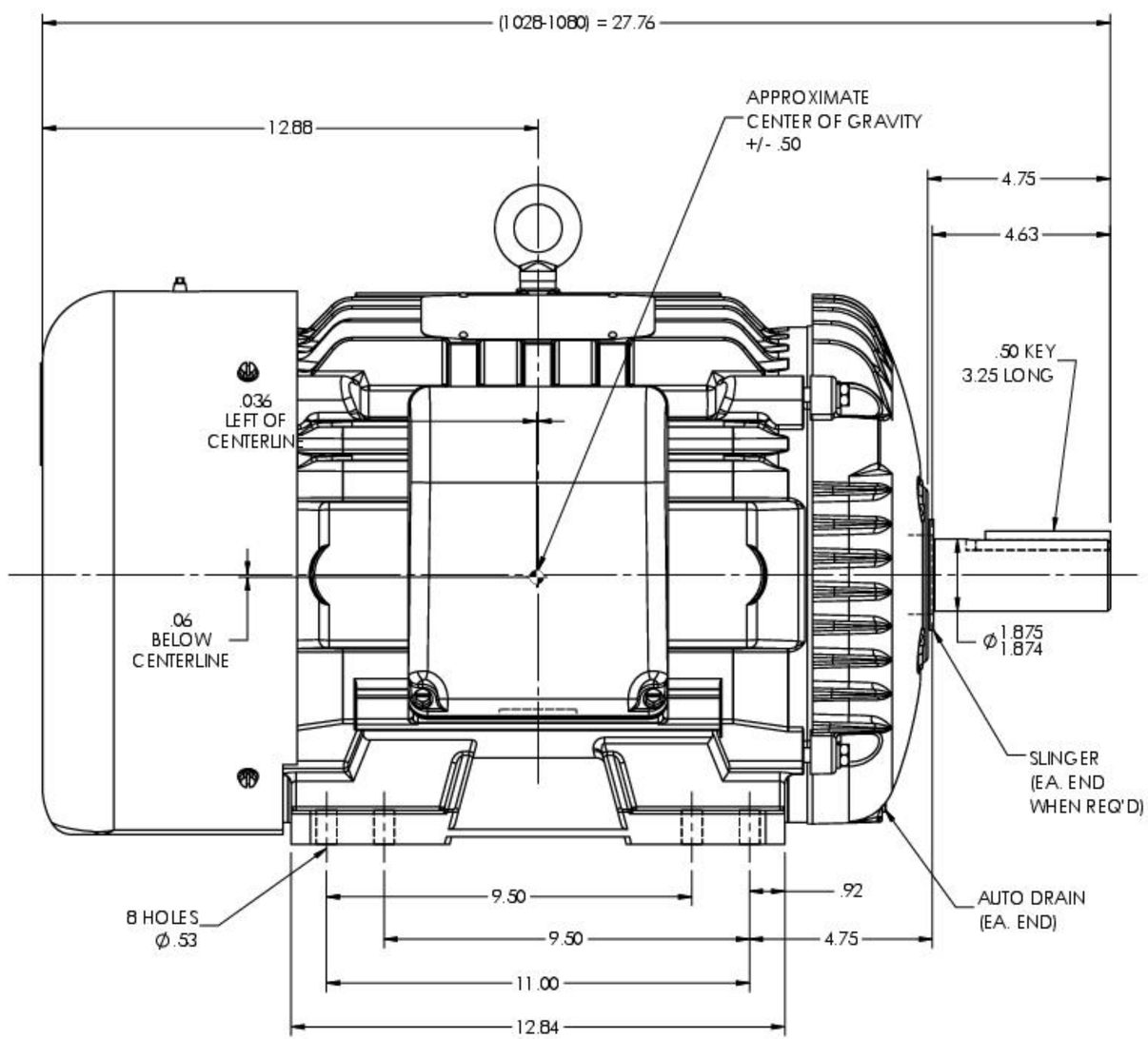

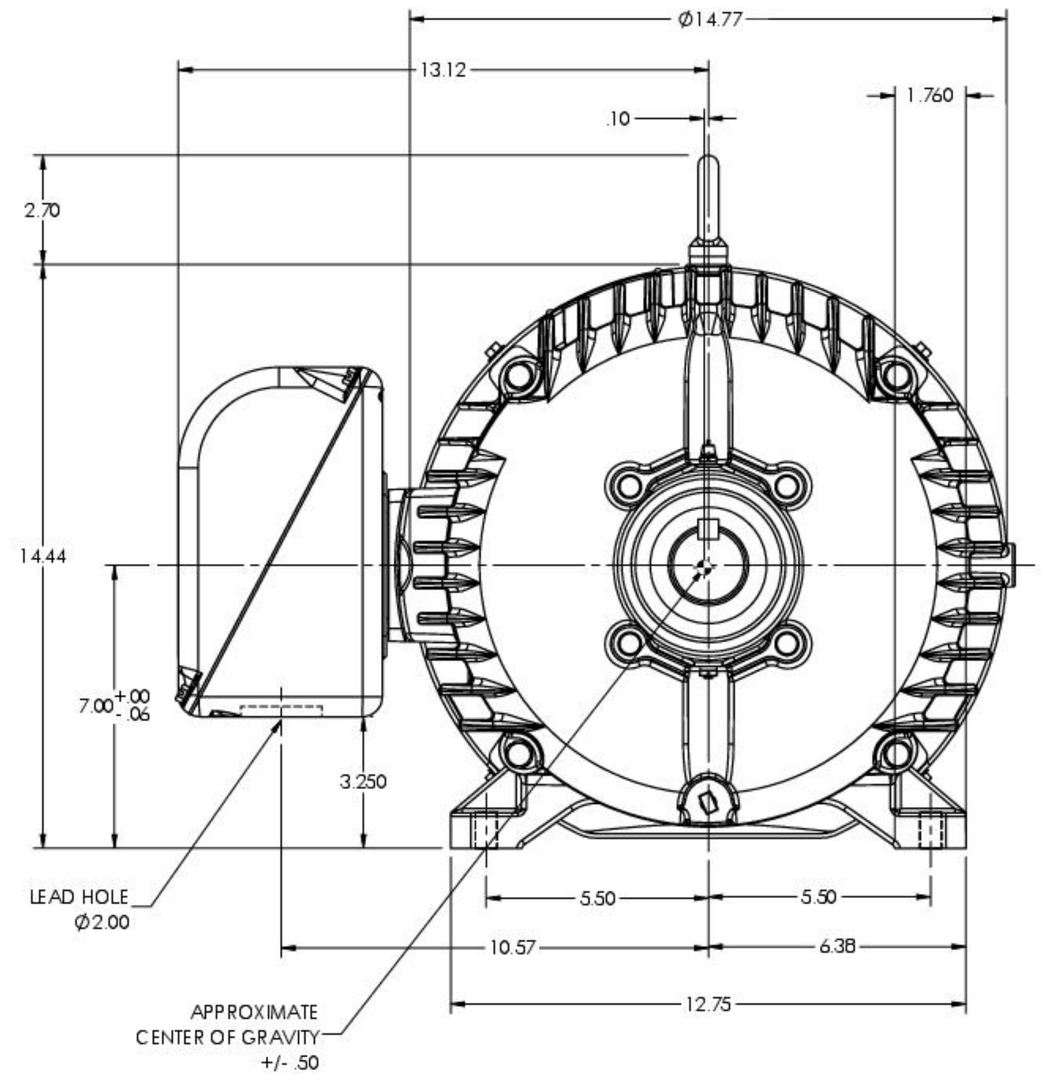

CUSTOMER IS RESPONSIBLE FOR DETERMINING THAT THE PRODUCT WILL PERFORM SUITABLY IN THE INTENDED APPLICATION

REV. DESC: REMOVED GREASER LEADERS			
REV: Q	VERSION: 12	REVISED: 02:26:25 12/27/2023	TDR: 000001222296
MODEL NO. 10LYC151			REF: -
BY: ENNINDO			B

BALDOR - RELIANCE®

HORZ TEFC 284-6T

10LYC151