12LYH011

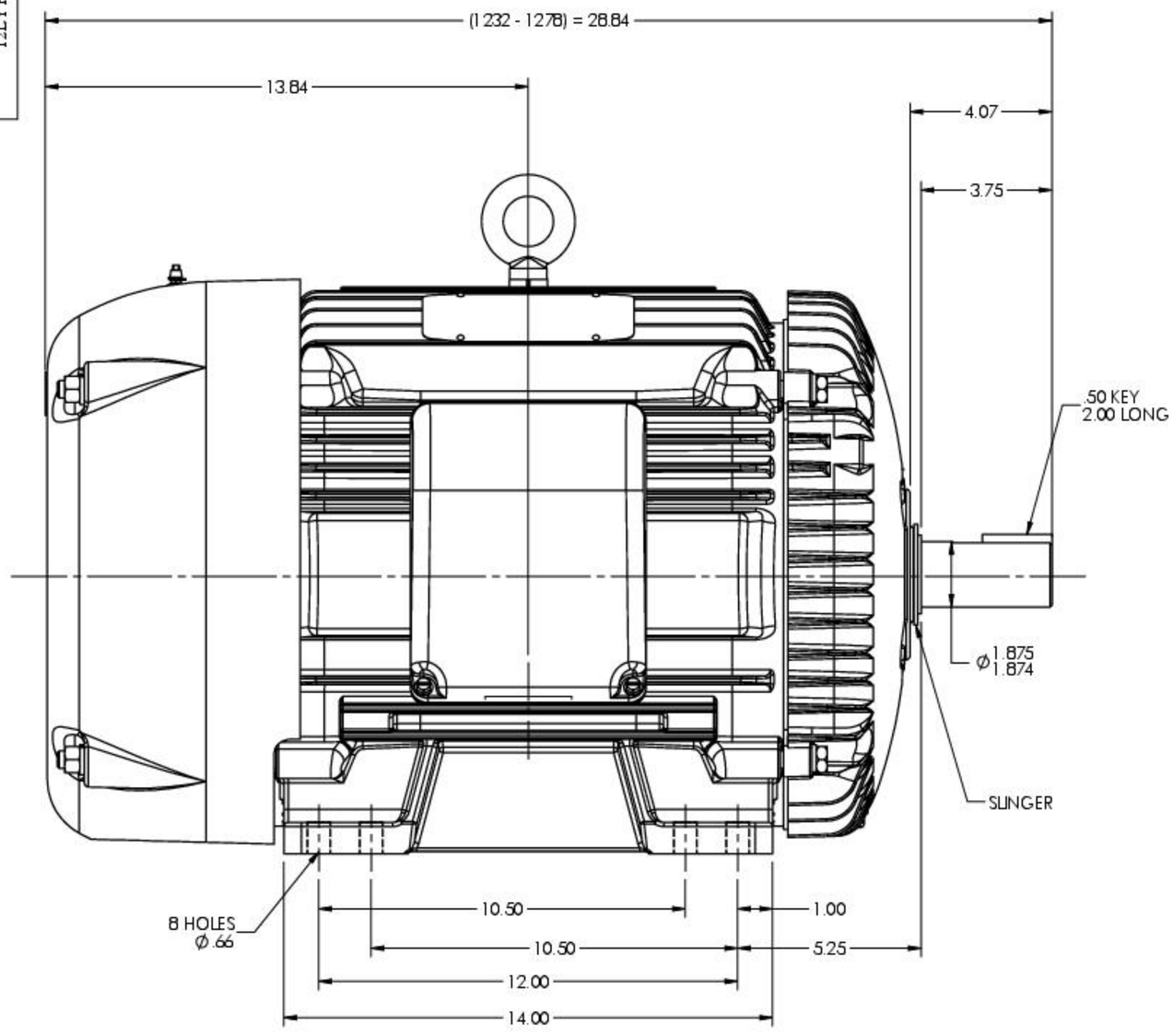

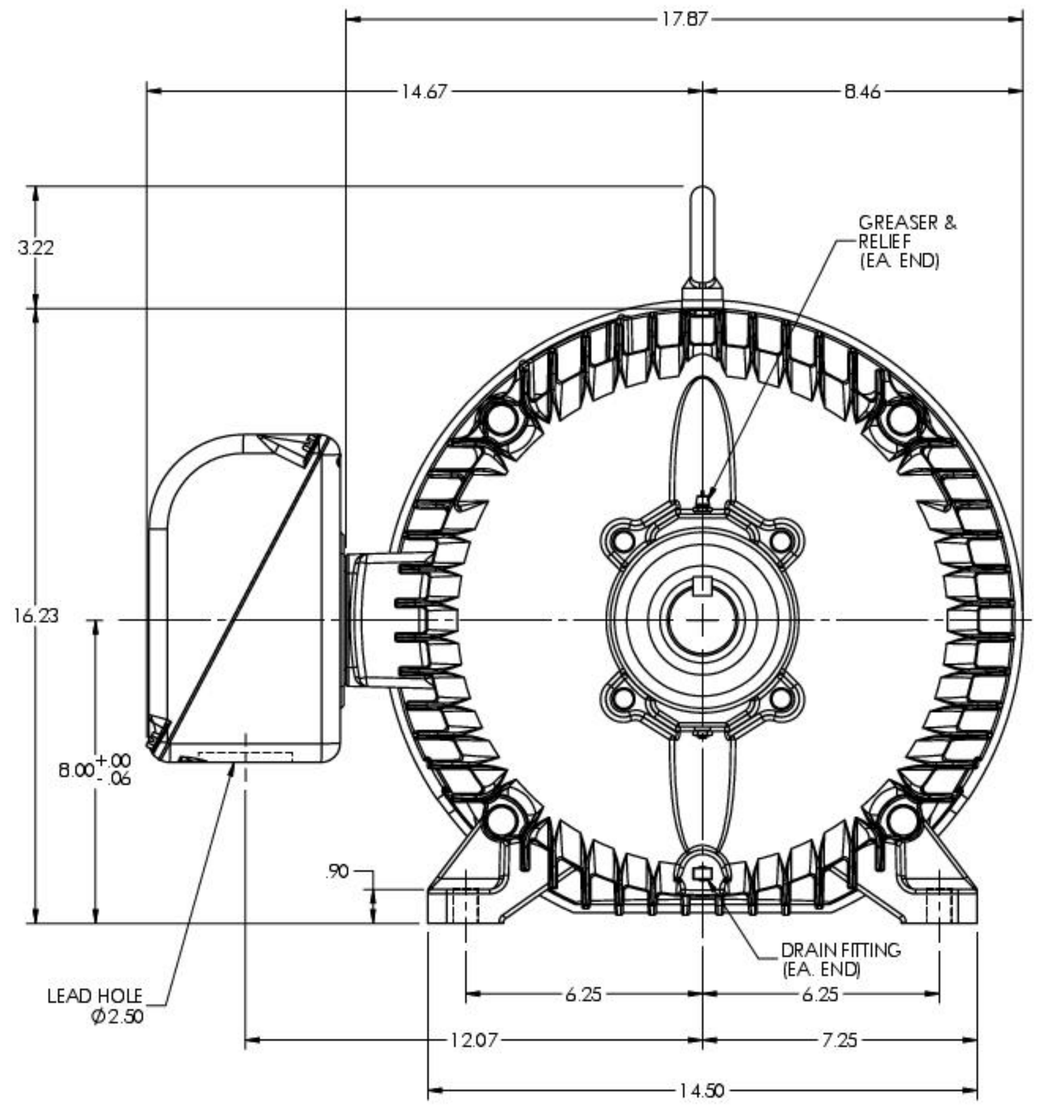

12LYH011

CUSTOMER IS RESPONSIBLE FOR DETERMINING THAT BALDOR'S PRODUCT WILL PERFORM SUITABLY IN THE INTENDED APPLICATION

REV. DESC: FIX DRAWING KEY WAY CALL OUT TO .50 X 2.00			
REV: L	VERSION: 07	REVISED: 11:49:32 02/14/2023	TDR: 000001203241
MODEL NO. 12LYH011			REF: -
BY: ENALEMO			B

BALDOR

HORZ TEFC 324-6TS

12LYH011