BALDOR • RELIANCE

# Product Information Packet

# EM7026T

## 3//2HP,3450//2890RPM,3PH,60//50HZ,182T,3

Copyright © All product information within this document is subject to ABB Motors and Mechanical Inc. copyright © protection, unless otherwise noted.

## Part Detail

| | | | | | | | |
|---|---|---|---|---|---|---|---|
| **Revision:** | J | **Status:** | PRD/A | **Change #:** | | **Proprietary:** | No |
| **Type:** | AC | **Elec. Spec:** | 36WGS041 | **CD Diagram:** | CD0005 | **Mfg Plant:** | |
| **Mech. Spec:** | 36N004 | **Layout:** | 36LYN004 | **Poles:** | 02 | **Created Date:** | 06-21-2010 |
| **Base:** | RG | **Eff. Date:** | 09-22-2017 | **Leads:** | 9#16 | | |

## Specs

| | | | |
|---|---|---|---|
| **Catalog Number:** | EM7026T | **Front Shaft Indicator:** | None |
| **Enclosure:** | XPFC | **Heater Indicator:** | No Heater |
| **Frame:** | 182T | **Insulation Class:** | B |
| **Frame Material:** | Steel | **Inverter Code:** | Not Inverter |
| **Output @ Frequency:** | 3.000 HP @ 60 HZ | **KVA Code:** | K |
| | 2.000 HP @ 50 HZ | **Lifting Lugs:** | No Lifting Lugs |
| **Synchronous Speed @ Frequency:** | 3600 RPM @ 60 HZ | **Locked Bearing Indicator:** | No Locked Bearing |
| **Voltage @ Frequency:** | 460.0 V @ 60 HZ | **Motor Lead Quantity/Wire Size:** | 9 @ 16 AWG |
| | 190.0 V @ 50 HZ | **Motor Lead Exit:** | Ko Box |
| | 230.0 V @ 60 HZ | **Motor Lead Termination:** | Flying Leads |
| | 380.0 V @ 50 HZ | **Motor Type:** | 3622M |
| **XP Class and Group:** | CLI GP D; CLII GP F,G | **Mounting Arrangement:** | F1 |
| **XP Division:** | Division I | **Power Factor:** | 91 |
| **Agency Approvals:** | UL | **Product Family:** | General Purpose |
| | CSA | **Pulley End Bearing Type:** | Ball |
| **Auxillary Box:** | No Auxillary Box | **Pulley Face Code:** | Standard |
| **Auxillary Box Lead Termination:** | None | **Pulley Shaft Indicator:** | Standard |
| **Base Indicator:** | Rigid | **Rodent Screen:** | None |

| | |
|---|---|
| **Bearing Grease Type:** | Polyrex EM (-20F +300F) |
| **Blower:** | None |
| **Current @ Voltage:** | 3.000 A @ 380.0 V |
| | 3.700 A @ 460.0 V |
| | 6.000 A @ 190.0 V |
| | 7.400 A @ 230.0 V |
| | 8.000 A @ 208.0 V |
| **Design Code:** | B |
| **Drip Cover:** | No Drip Cover |
| **Duty Rating:** | CONT |
| **Electrically Isolated Bearing:** | Not Electrically Isolated |
| **Feedback Device:** | NO FEEDBACK |
| **Front Face Code:** | Standard |

| | |
|---|---|
| **RoHS Status:** | ROHS COMPLIANT |
| **Shaft Extension Location:** | Pulley End |
| **Shaft Ground Indicator:** | No Shaft Grounding |
| **Shaft Rotation:** | Reversible |
| **Shaft Slinger Indicator:** | No Slinger |
| **Speed Code:** | Single Speed |
| **Motor Standards:** | NEMA |
| **Starting Method:** | Direct on line |
| **Thermal Device - Bearing:** | NONE (OLD) |
| **Thermal Device - Winding:** | Normally Closed Thermostat |
| **Vibration Sensor Indicator:** | No Vibration Sensor |
| **Winding Thermal 1:** | None |
| **Winding Thermal 2:** | None |
| **XP Temp Code:** | T3C |

## Nameplate NP1426XPSLEV

| | | | | | | |
|---|---|---|---|---|---|---|
| **NO.** | | **CC** | 010A | | | |
| **SER.** | | | | | | |
| **SPEC.** | 36N004S041G1 | | | | | |
| **CAT.NO.** | EM7026T | | | | | |
| **HP** | 3//2 | **T. CODE** | T3C | | | |
| **VOLTS** | 230/460//190/380 | | | | | |
| **AMPS** | 7.4/3.7//6/3 | | | | | |
| **RPM** | 3450//2890 | | | | | |
| **HZ** | 60//50 | **PH** | 3 | **CL** | B | |
| **SER.F.** | 1.00 | **DES** | B | **CODE** | K | |
| **RATING** | 40C AMB-CONT | | | | | |
| **FRAME** | 182T | **NEMA-NOM-EFF** | 86.5 | | | |
| **USABLE AT 208V** | 8 | **PF** | 91 | | | |
| **BLANK** | | | | | | |

## Parts List

| Part Number | Description | Quantity |
|---|---|---|
| SA199138 | SA 36N004S041G1 | 1.000 EA |
| RA186478 | RA 36N004S041G1 | 1.000 EA |
| 34FN3002A02 | EXTERNAL FAN, PLASTIC, .905/.907 HUB W/ | 1.000 EA |
| 35CB3001A02SP | EXPL PROOF CONDUIT BOX, 3/4"PIPE TAP LEA | 1.000 EA |
| 11XW1032G06 | 10-32 X .38, TAPTITE II, HEX WSHR SLTD U | 1.000 EA |
| HW3001B01 | BRASS CUP WASHER, FOR #10 SCREW | 1.000 EA |
| 36EP3700A01 | FR ENDPLATE, MACH | 1.000 EA |
| HW4500A19 | 1/4-28X1/4 SLOTTED PLUG F/S | 2.000 EA |
| HW5100A05 | WVY WSHR F/205 & 304 BRGS | 1.000 EA |
| 36EP3701A01 | PU ENDPLATE, MACH | 1.000 EA |
| HW4500A19 | 1/4-28X1/4 SLOTTED PLUG F/S | 2.000 EA |
| XY3816A12 | 3/8-16 FINISHED NUT | 4.000 EA |
| 51XB1214A16 | 12-14X1.00 HXWSSLD SERTYB | 1.000 EA |
| 36FH4009A02 | FAN COVER FOR VM7042T,PRIMER | 1.000 EA |
| 51XW1032A06 | 10-32 X .38, TAPTITE II, HEX WSHR SLTD S | 3.000 EA |
| 35CB3500A01SP | CONDUIT BOX LID, MACH | 1.000 EA |
| 51XN2520A16 | SCREW, HEX WS SLT, ZN, 1/4-20 X 1.00 | 4.000 EA |
| HW2501E16 | KEY, 1/4 SQ X 1.750 | 1.000 EA |
| HA7000A02 | KEY RETAINER RING, 1 1/8 DIA, 1 3/8 DIA | 1.000 EA |
| 85XU0407S04 | 4X1/4 U DRIVE PIN STAINLESS | 6.000 EA |
| NP0018F | ALUM UL XP CONDUIT BOX NAMEPLATE | 1.000 EA |
| MJ1000A02 | GREASE, POLYREX EM EXXON (USe 4824-15A) | 0.050 LB |
| MG1025G29 | WILKOFAST, 789.229, DARK CHARCOAL GRAY | 0.022 GA |
| HA3105A02 | THRUBOLT 3/8-16 X 9.125 DEMBY | 4.000 EA |

## Parts List (continued)

| Part Number | Description | Quantity |
|---|---|---|
| LB1119N | WARNING LABEL | 1.000 EA |
| LC0145B01 | CONNECTION LABEL | 1.000 EA |
| NP1426XPSLEV | SS XP UL CSA-EEV CC CL-I GP-D | 1.000 EA |
| 36PA1001 | PKG GRP, PRINT PK1017A06 | 1.000 EA |
| MN416A01 | TAG-INSTAL-MAINT no wire (1200/bx) 5/18 | 1.000 EA |

**AC Induction Motor Performance Data**

Record # 35705 - Typical performance - not guaranteed values

| **Winding:** 36WGS041-R005 | **Type:** 3622M | **Enclosure:** XPFC |
|---|---|---|

| Nameplate Data | | | | 460 V, 60 Hz: High Voltage Connection | |
|---|---|---|---|---|---|
| Rated Output (HP) | 3//2 | | | Full Load Torque | 4.7 LB-FT |
| Volts | 230/460//190/380 | | | Start Configuration | direct on line |
| Full Load Amps | 7.4/3.7//6/3 | | | Breakdown Torque | 19.7 LB-FT |
| R.P.M. | 3450//2890 | | | Pull-up Torque | 12 LB-FT |
| Hz | 60//50 | Phase | 3 | Locked-rotor Torque | 14.1 LB-FT |
| NEMA Design Code | B | KVA Code | K | Starting Current | 33.3 A |
| Service Factor (S.F.) | 1 | | | No-load Current | 1.17 A |
| NEMA Nom. Eff. | 86.5 | Power Factor | 91 | Line-line Res. @ 25ºC | 4.62 Ω |
| Rating - Duty | 40C AMB-CONT | | | Temp. Rise @ Rated Load | 52°C |
| S.F. Amps | | | | Temp. Rise @ S.F. Load | 64°C |
| | | | | Locked-rotor Power Factor | 48 |
| | | | | Rotor inertia | 0.0984 LB-FT2 |

Load Characteristics 460 V, 60 Hz, 3 HP

| % of Rated Load | 25 | 50 | 75 | 100 | 125 | 150 |
|---|---|---|---|---|---|---|
| Power Factor | 66 | 82 | 88 | 91 | 92 | 93 |
| Efficiency | 80.4 | 86 | 87.4 | 86.9 | 86.1 | 84.5 |
| Speed | 3565 | 3535 | 3504 | 3472 | 3434 | 3394 |
| Line amperes | 1.56 | 2.17 | 2.93 | 3.67 | 4.57 | 5.5 |

Performance Graph at 460V, 60Hz, 3.0HP Typical performance - Not guaranteed values

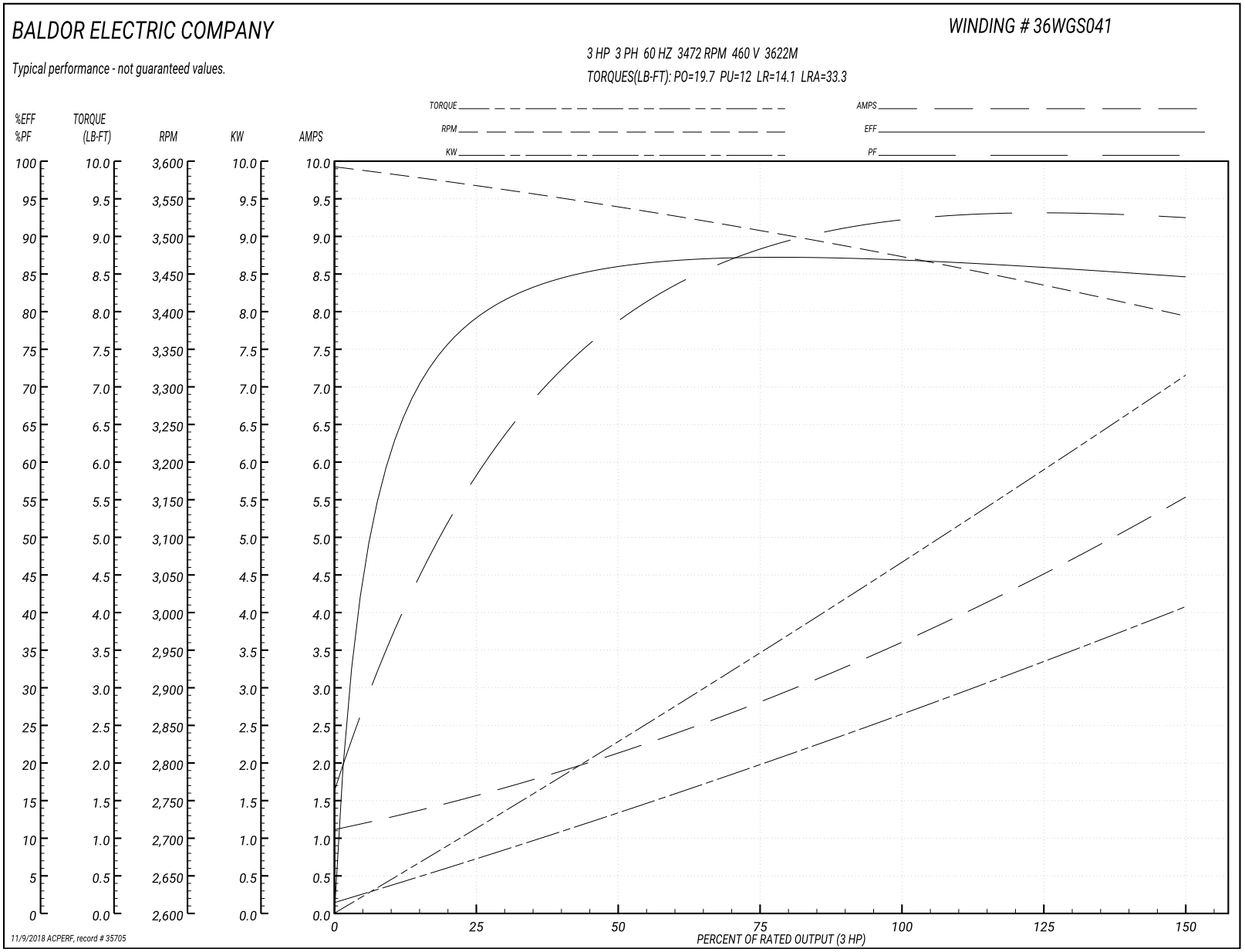

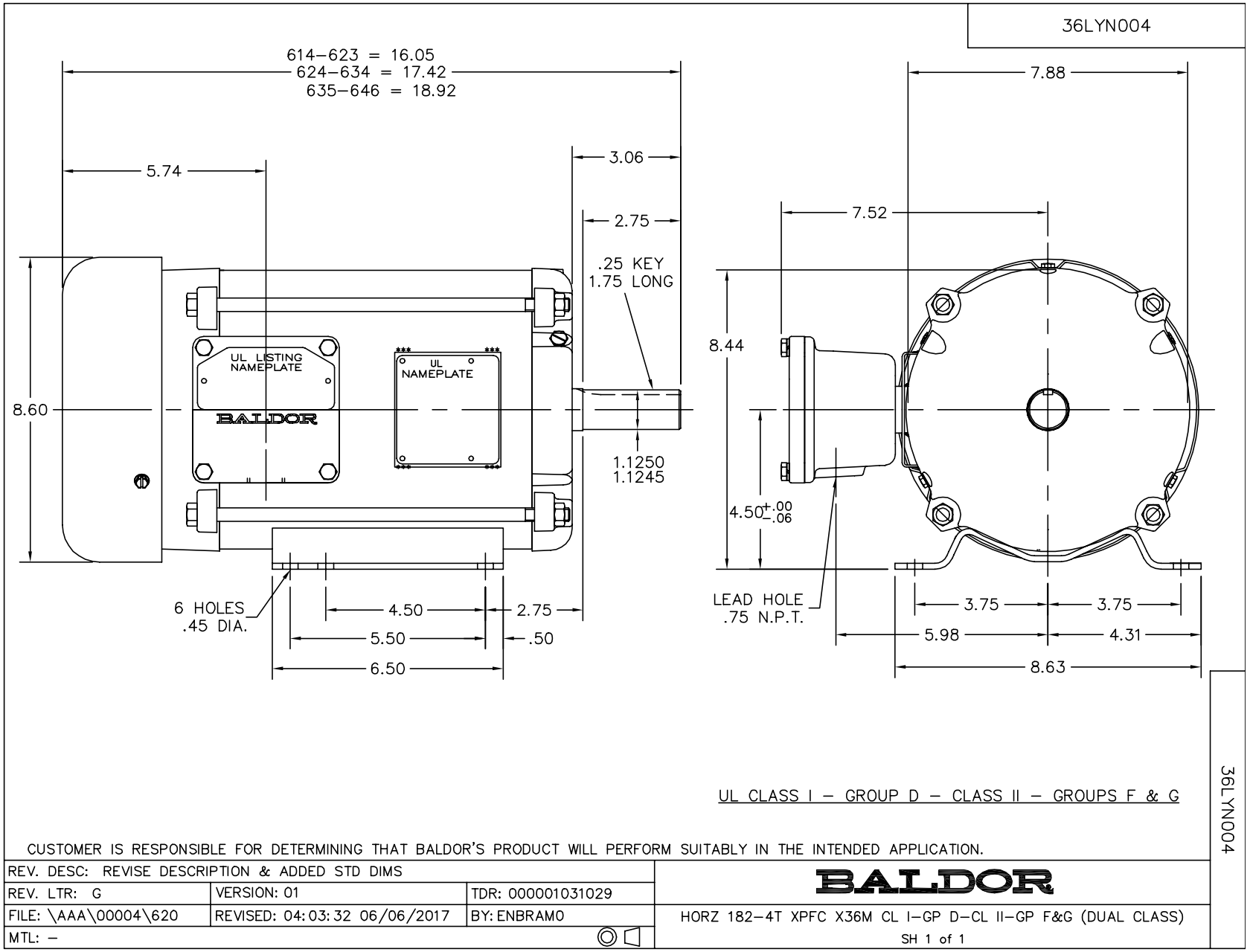
36LYN004
614–623 = 16.05
624–634 = 17.42
635–646 = 18.92
5.74
3.06
2.75
.25 KEY
1.75 LONG
8.60
UL LISTING NAMEPLATE
UL NAMEPLATE
BALDOR
1.1250
1.1245
6 HOLES
.45 DIA.
4.50
2.75
5.50
.50
6.50
7.88
7.52
8.44
4.50 +.00 -.06
LEAD HOLE
.75 N.P.T.
3.75
3.75
5.98
4.31
8.63
UL CLASS I – GROUP D – CLASS II – GROUPS F & G
CUSTOMER IS RESPONSIBLE FOR DETERMINING THAT BALDOR'S PRODUCT WILL PERFORM SUITABLY IN THE INTENDED APPLICATION.
REV. DESC: REVISE DESCRIPTION & ADDED STD DIMS
REV. LTR: G
VERSION: 01
TDR: 000001031029
FILE: \AAA\00004\620
REVISED: 04:03:32 06/06/2017
BY: ENBRAM0
MTL: –
BALDOR
HORZ 182–4T XPFC X36M CL I–GP D–CL II–GP F&G (DUAL CLASS)
SH 1 of 1
36LYN004

CD0005

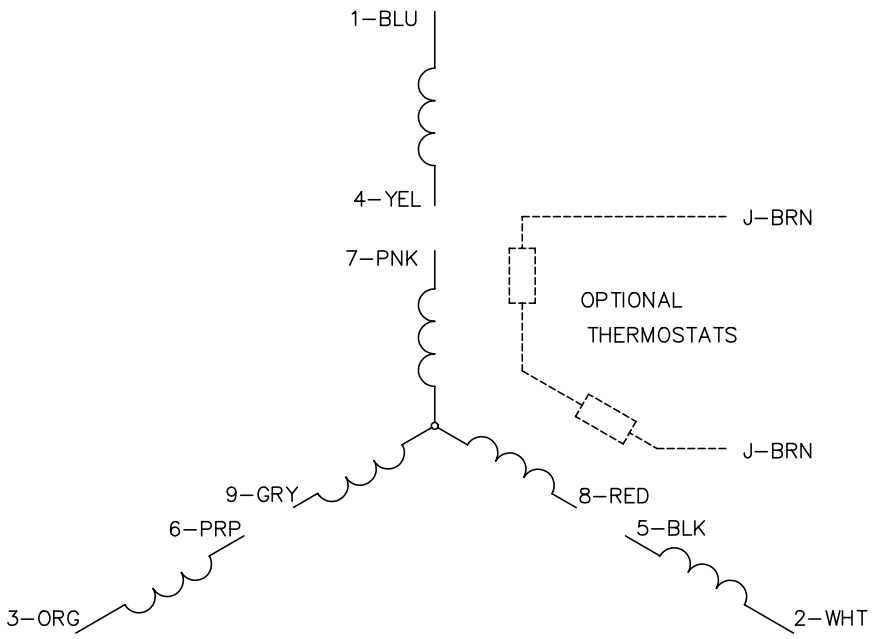


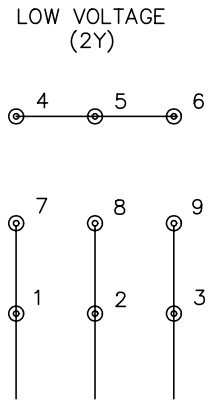


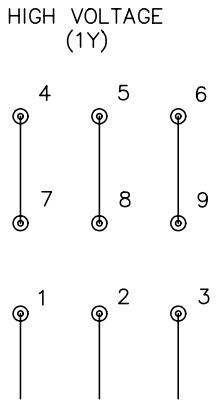


NOTES:

1. INTERCHANGE ANY TWO LINE LEADS TO REVERSE ROTATION.
2. OPTIONAL THERMOSTATS ARE PROVIDED WHEN SPECIFIED.
3. ACTUAL NUMBER OF INTERNAL PARALLEL CIRCUITS MAY BE A MULTIPLE OF THOSE SHOWN ABOVE.
4. LEAD COLORS ARE OPTIONAL. LEADS MUST ALWAYS BE NUMBERED AS SHOWN.

| | | | |
|---|---|---|---|
| REV. DESC: REVISE TO SHOW OPTIONAL COLORS | | | BALDOR ELECTRIC Co. |
| REV. LTR: E | BY: JLP | REVISED: 01/19/99 10:15 | TDR: 0171435 |
| CD0005 | | FILE: AAA00005140 | MDL: – |
| | | MTL: – | 3PH, DV, 9 LEADS |

CD0005