BALDOR® • RELIANCE

Product Information Packet

HDS180-2540BGKNN

HDS180-2540B w/Absolute singl-turn (DSL)

Specs			
Bearing Grease Type:	Polyrex EM		
Dimensional Drawing Numbers:	HD180LYA002		
Nameplate Amps:	16.5		

Copyright © All product information within this document is subject to ABB Motors and Mechanical Inc. copyright © protection, unless otherwise noted.

No performance data has been assigned to this product.

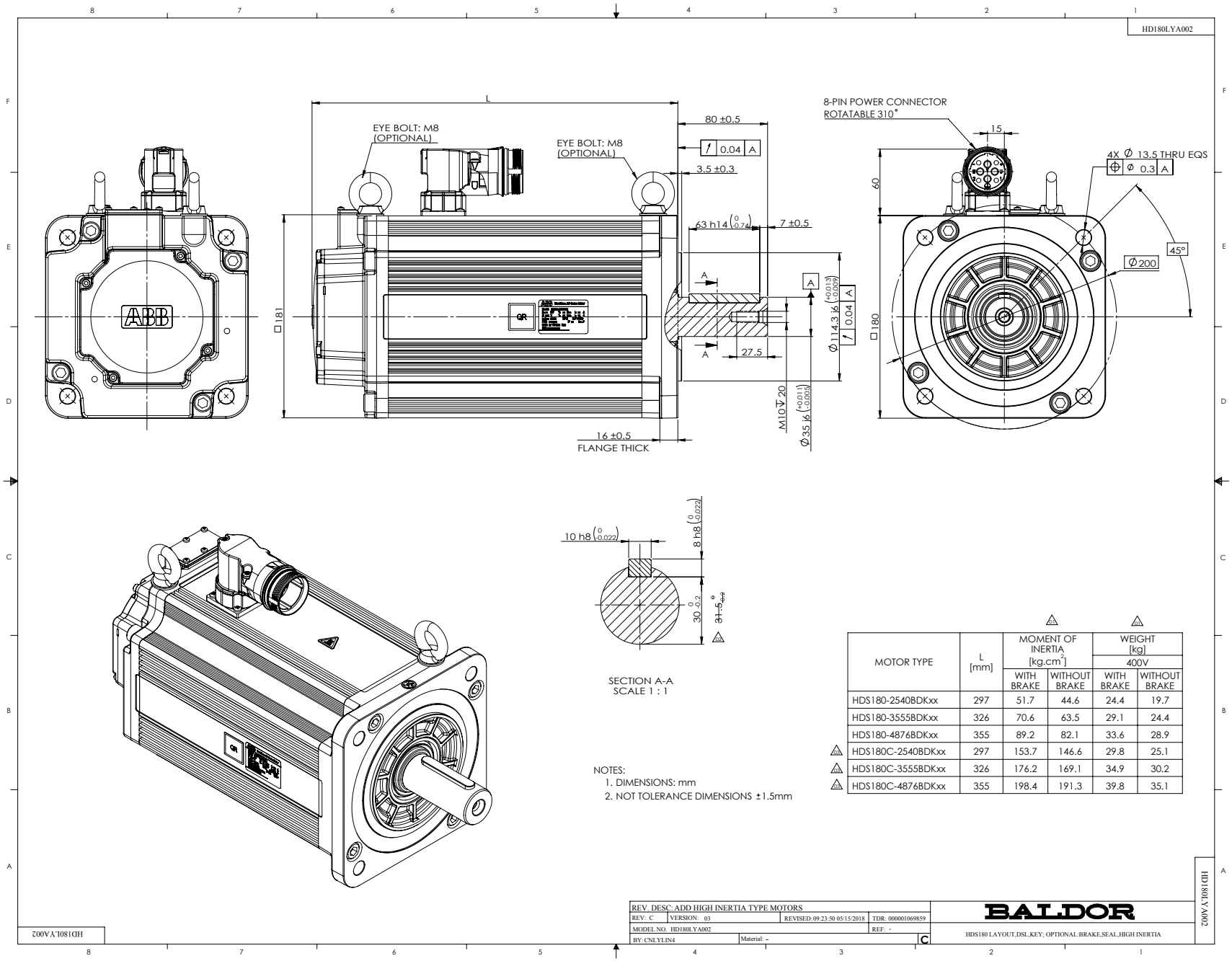

MOTOR TYPE	L [mm]	MOMENT OF INERTIA [kg.cm²]		WEIGHT [kg] 400V	
		WITH BRAKE	WITHOUT BRAKE	WITH BRAKE	WITHOUT BRAKE
HDS180-2540BDKxx	297	51.7	44.6	24.4	19.7
HDS180-3555BDKxx	326	70.6	63.5	29.1	24.4
HDS180-4876BDKxx	355	89.2	82.1	33.6	28.9
HDS180C-2540BDKxx	297	153.7	146.6	29.8	25.1
HDS180C-3555BDKxx	326	176.2	169.1	34.9	30.2
HDS180C-4876BDKxx	355	198.4	191.3	39.8	35.1

NOTES:
1. DIMENSIONS: mm
2. NOT TOLERANCE DIMENSIONS ±1.5mm

REV. DESC: ADD HIGH INERTIA TYPE MOTORS
REV: C | VERSION: 03 | REVISED: 09:23:50 05/15/2018 | TDR: 000001069859
MODEL NO. HD180LYA002 | REF: -
BY: CNLYLIN4 | Material: – | C

BALDOR

HDS180 LAYOUT,DSL,KEY; OPTIONAL:BRAKE,SEAL,HIGH INERTIA

HD180LYA002

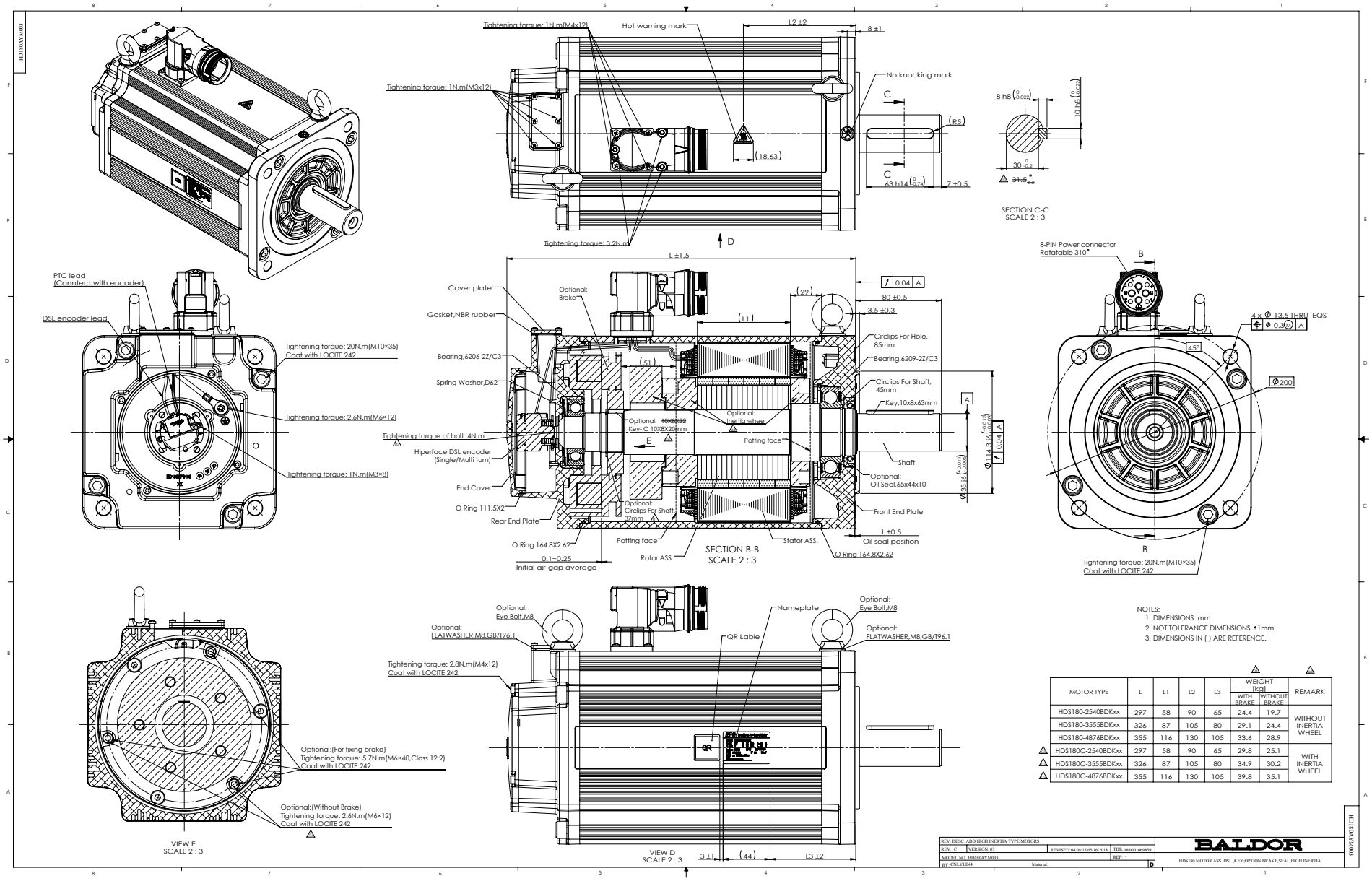

NOTES:
1. DIMENSIONS: mm
2. NOT TOLERANCE DIMENSIONS ±1mm
3. DIMENSIONS IN ( ) ARE REFERENCE.

	MOTOR TYPE	L	L1	L2	L3	WEIGHT [kg] WITH BRAKE	WEIGHT [kg] WITHOUT BRAKE	REMARK
	HDS180-2540BDKxx	297	58	90	65	24.4	19.7	WITHOUT INERTIA WHEEL
	HDS180-3555BDKxx	326	87	105	80	29.1	24.4	
	HDS180-4876BDKxx	355	116	130	105	33.6	28.9	
△	HDS180C-2540BDKxx	297	58	90	65	29.8	25.1	WITH INERTIA WHEEL
△	HDS180C-3555BDKxx	326	87	105	80	34.9	30.2	
△	HDS180C-4876BDKxx	355	116	130	105	39.8	35.1	

CD2167A10

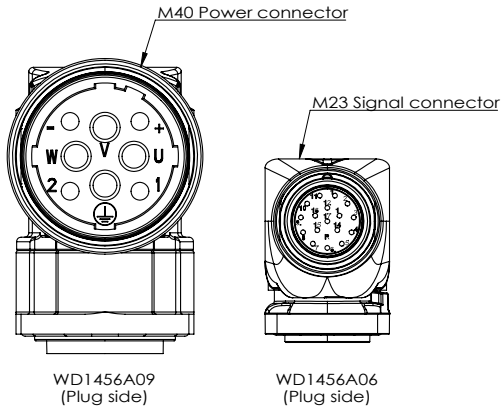

WD1456A09
(Plug side)

WD1456A06
(Plug side)

Motor connection definition_Resolver					
Power connector definition (Power & Brake & PTC leads)			Signal connector definition (Resolver leads)		
PIN	Function	Color	PIN	Function	Color
U	U(R) phase	Black	1	R1 (REF+)	Red/White
V	V(S) phase	Red	2	R2 (REF-)	Yellow/White
W	W(T) phase	Blue	3	S1 (COS+)	Red
PE	Ground	Yellow/Green	4	S3 (COS-)	Black
1	PTC	Black	5	S4 (SIN-)	Blue
2	PTC	Blue	6	S2 (SIN+)	Yellow
+	Brake	Yellow	7~17	-	-
-	Brake	Yellow			
Note: When motor without brake, power connector PIN +/- function is N/C.					

Motor connection definition_Smart-ABS encoder					
Power connector definition (Power & Brake & PTC leads)			Signal connector definition (Smart-ABS encoder leads)		
PIN	Function	Color	PIN	Function	Color
U	U(R) phase	Black	1	VCC	Red
V	V(S) phase	Red	2	GND	Black
W	W(T) phase	Blue	3	VB	Brown
PE	Ground	Yellow/Green	4	GND	Brown/Black
1	PTC	Black	5	SD	Blue
2	PTC	Blue	6	SD	Blue/Black
+	Brake	Yellow	7	Gase GND	Gray
-	Brake	Yellow	8~17	-	-
Note: When motor without brake, power connector PIN +/- function is N/C.					

Motor connection definition_Hiperface DSL encoder		
Power connector definition (Power & Brake & DSL leads)		
PIN	Function	Color
U	U(R) phase	Black
V	V(S) phase	Red
W	W(T) phase	Blue
PE	Ground	Yellow/Green
1	+U_S/DSL+/PTC	Gray
2	GND/DSL-/PTC	Green
+	Brake	Yellow
-	Brake	Yellow
Note: When motor without brake, power connector PIN +/- function is N/C.		

Motor connection definition_Incremental encoder								
Power connector definition (Power & Brake & PTC leads)			Signal connector definition (Incremental leads)					
PIN	Function	Color	PIN	Function	Color	PIN	Function	Color
U	U(R) phase	Black	1	DC+5V	Red	10	U	Brown
V	V(S) phase	Red	2	GND	Black	11	$\overline{U}$	Brown/Black
W	W(T) phase	Blue	3	A	Blue	12	V	Gray
PE	Ground	Yellow/Green	4	$\overline{A}$	Blue/Black	13	$\overline{V}$	Gray/Black
1	PTC	Black	5	B	Green	14	W	White
2	PTC	Blue	6	$\overline{B}$	Green/Black	15	$\overline{W}$	White/Black
+	Brake	Yellow	7	Z	Yellow	9,16,17	-	-
-	Brake	Yellow	8	$\overline{Z}$	Yellow/Black			
Note: When motor without brake, power connector PIN +/- function is N/C.								

REV. DESC: NEW			
REV: -	VERSION: 00	REVISED: 01:37:13 09/29/2017	TDR: 000001044967
MODEL NO. CD2167A10			REF: -
BY: CNSESU2	Material: -		B

BALDOR

CONNECTION DIAGRAM,HDS180

CD2167A10