34LYC061

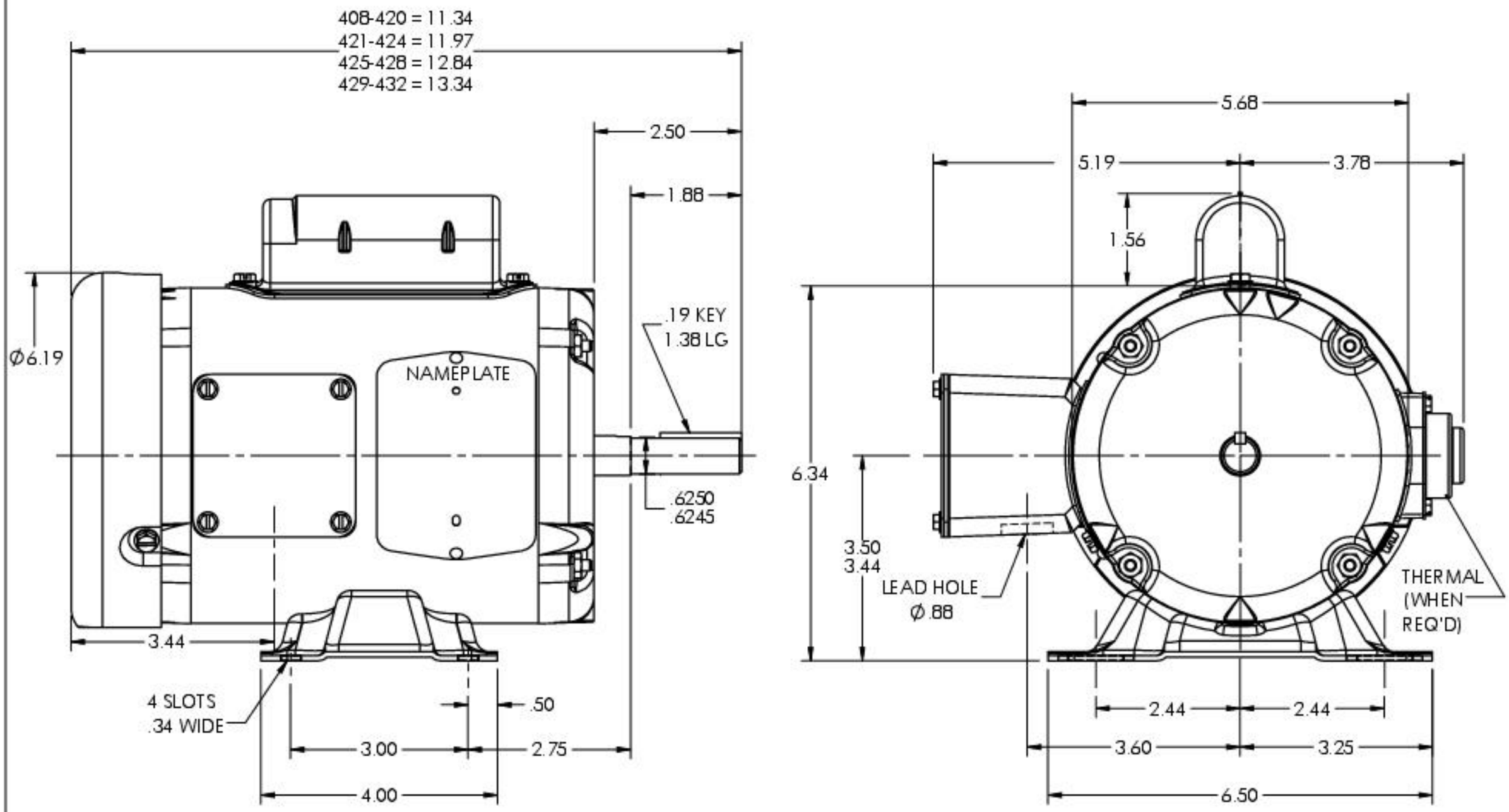

CUSTOMER IS RESPONSIBLE FOR DETERMINING THAT THE PRODUCT WILL PERFORM SUITABLY IN THE INTENDED APPLICATION

REV. DESC: LOAD TO SOLIDWORKS			
REV: H	VERSION: 03	REVISED: 04:47:51 08/30/2022	TDR: 000001194274
34LYC061	MODEL NO. 34LYC061		REF: -
	BY: ENFRAJO		

BALDOR - RELIANCE®

STD HORZ MODEL 34L NEMA 56 TEFC

34LYC061