37LYC001

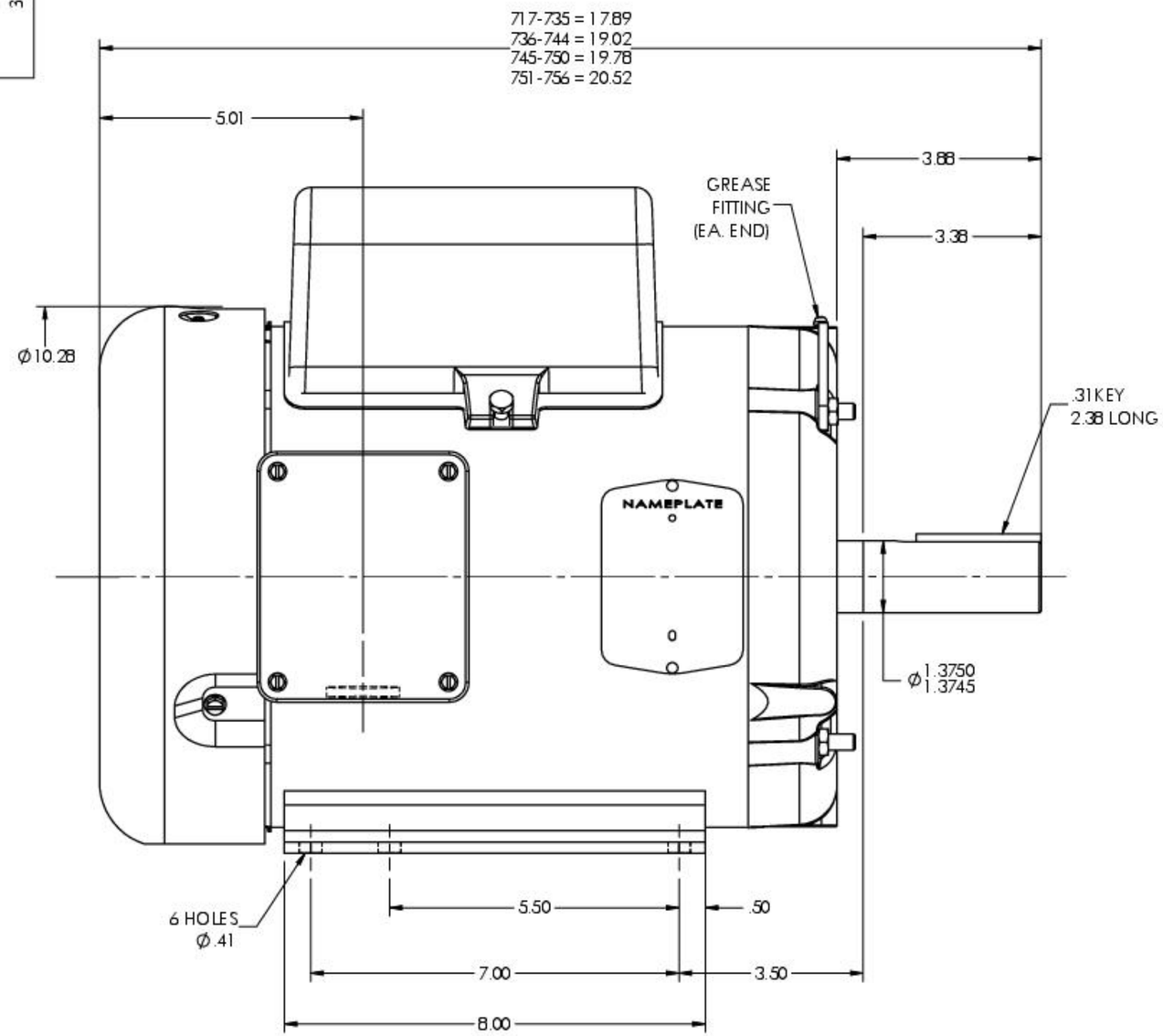

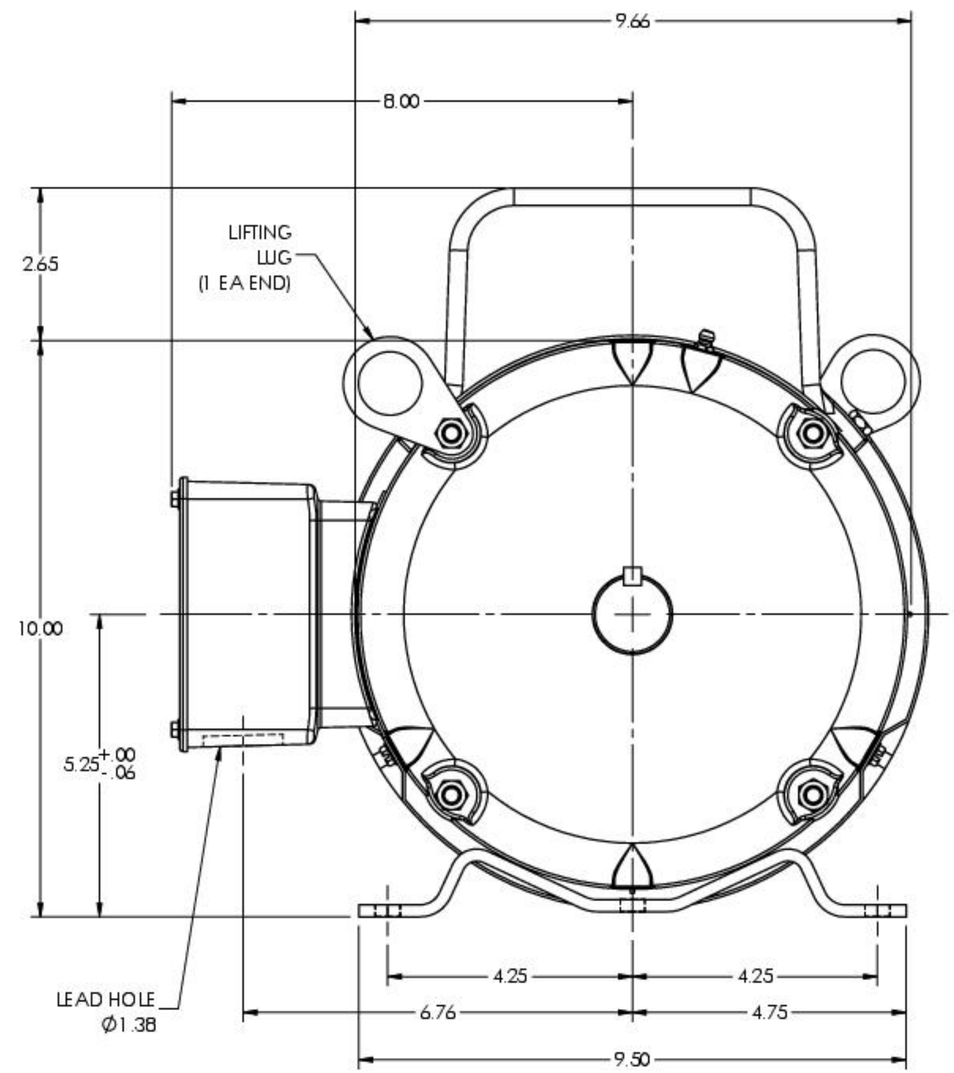

CUSTOMER IS RESPONSIBLE FOR DETERMINING THAT THE PRODUCT WILL PERFORM SUITABLY IN THE INTENDED APPLICATION

REV. DESC: CONVERT AUTOCAD TO SWD DRAWING			
REV: R	VERSION: 02	REVISED: 12:57:31 05/01/2024	TDR: 000001230132
MODEL NO. 37LYC001			REF: -
BY: USALMAZ			B

BALDOR - RELIANCE®

STD HORZ NEMA 213-5T TEFC 37LC

37LYC001