37LYM293

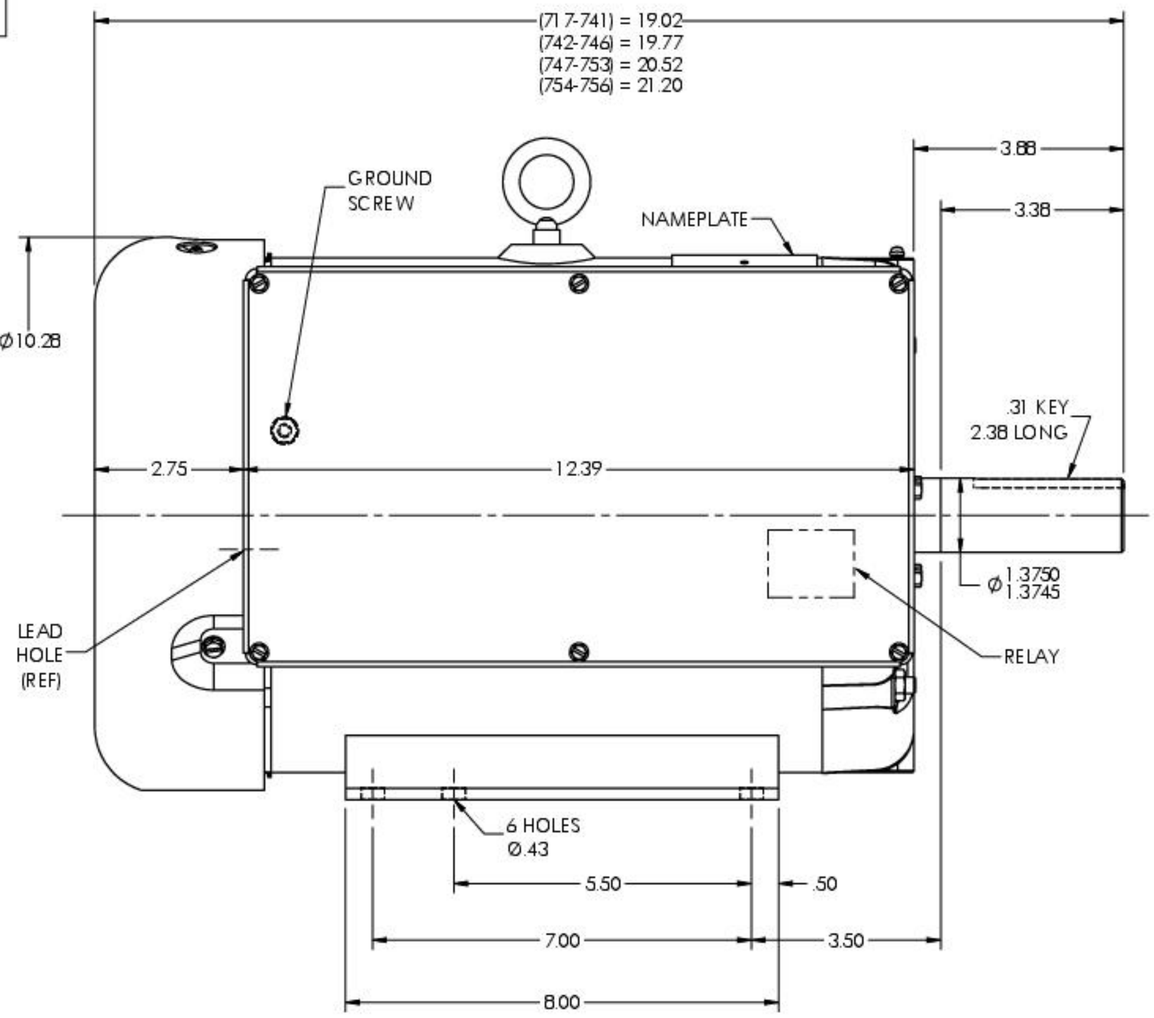


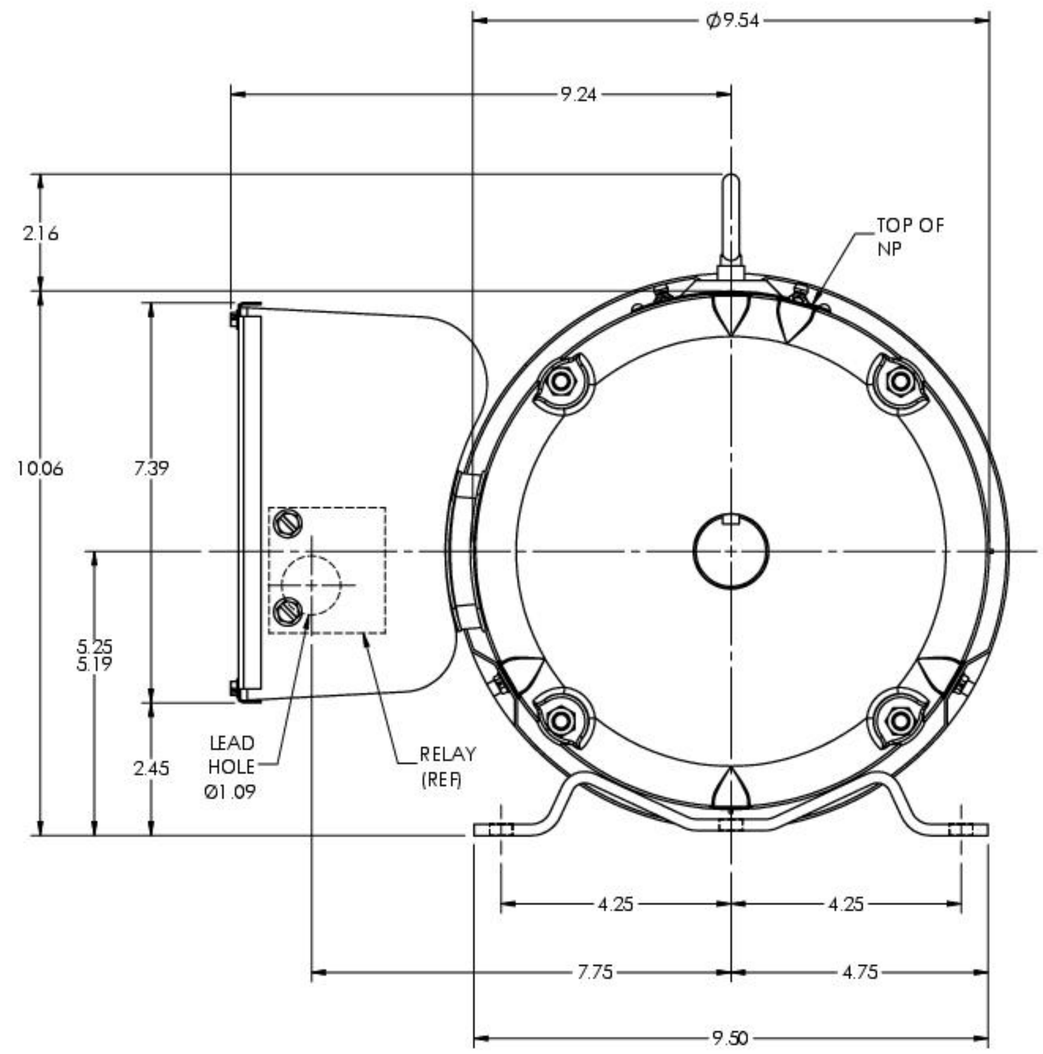


CUSTOMER IS RESPONSIBLE FOR DETERMINING THAT THE PRODUCT WILL PERFORM SUITABLY IN THE INTENDED APPLICATION

| | | | |
|---|---|---|---|
| REV. DESC: CONVERSION OF ACAD TO SWD IN OPC PKG 19 | | | |
| REV: B | VERSION: 02 | REVISED: 10:29:28 10/11/2022 | TDR: 000001197758 |
| MODEL NO. 37LYM293 | | | REF: - |
| BY: ENALEMO | | | B |

BALDOR - RELIANCE®

HOR 213-5T TEFC LC 37CB3804,RELAY,FINNED ENDRING,TORQ SWITCH

37LYM293