PRODUCT INFORMATION PACKET

Model No: SSD2P20/25T6006YEH2
Catalog No: LM30095
20,3600,DP,254T,3/60/200
Elevator Duty

Regal and Leeson are trademarks of Regal Beloit Corporation or one of its affiliated companies.
©2018 Regal Beloit Corporation, All Rights Reserved. MC017097E

Nameplate Specifications

Output HP	**20 Hp**	Output KW	**14.9 kW**
Frequency	**60 Hz**	Voltage	**200 V**
Current	**53.0 A**	Speed	**3520 rpm**
Service Factor	**1**	Phase	**3**
Efficiency	**91 %**	Duty	**120/80 Starts/Hour**
Insulation Class	**F**	Design Code	**B**
KVA Code	**E**	Frame	**254T**
Enclosure	**Drip Proof**	Overload Protector	**No**
Ambient Temperature	**40 °C**	Drive End Bearing Size	**309**
Opp Drive End Bearing Size	**208**	UL	**Recognized**
CSA	**Y**	CE	**Y**
IP Code	**12**		

Technical Specifications

Electrical Type	**Squirrel Cage Induction Run**	Starting Method	**Wye Start Delta Run**
Poles	**2**	Rotation	**Reversible**
Mounting	**Rigid base**	Motor Orientation	**HORIZONTAL**
Drive End Bearing	**BALL**	Opp Drive End Bearing	**BALL**
Frame Material	**Rolled Steel**	Shaft Type	**T**
Overall Length	**20.57 in**	Frame Length	**13.70 in**
Shaft Diameter	**1.625 in**	Shaft Extension	**4 in**
Assembly/Box Mounting	**F1 ONLY**		
Outline Drawing	**A-SS86503LN-1370**	Connection Diagram	**A-EE7340-LN**

This is an uncontrolled document once printed or downloaded and is subject to change without notice. Date Created: 10/15/2018

A- SS86503LN

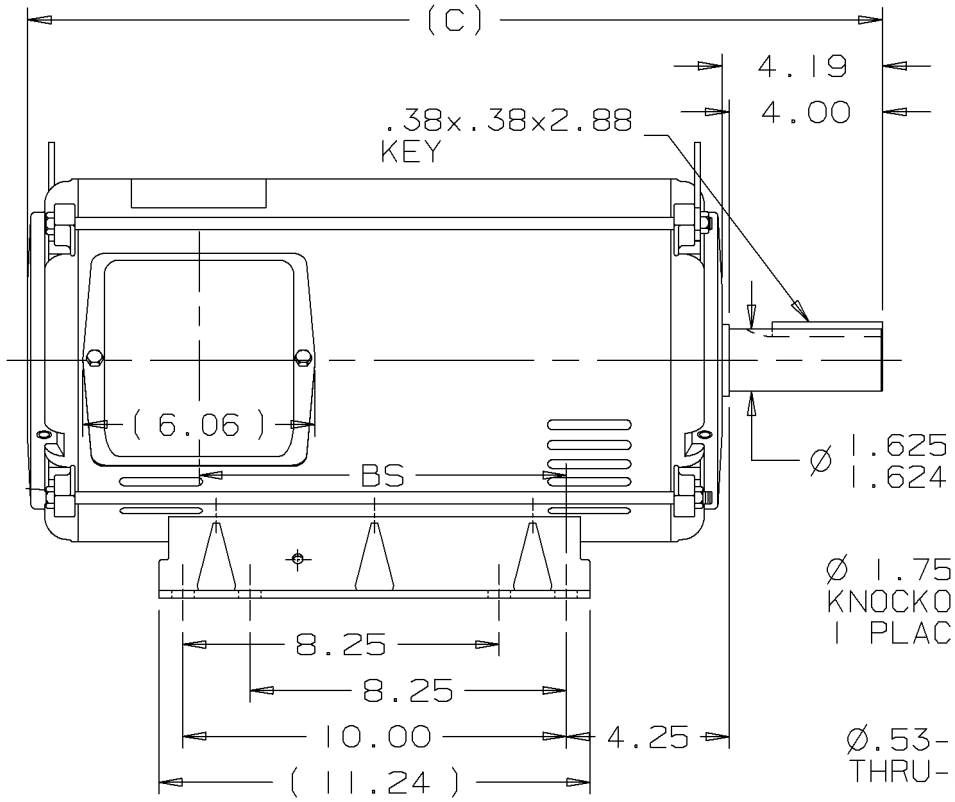

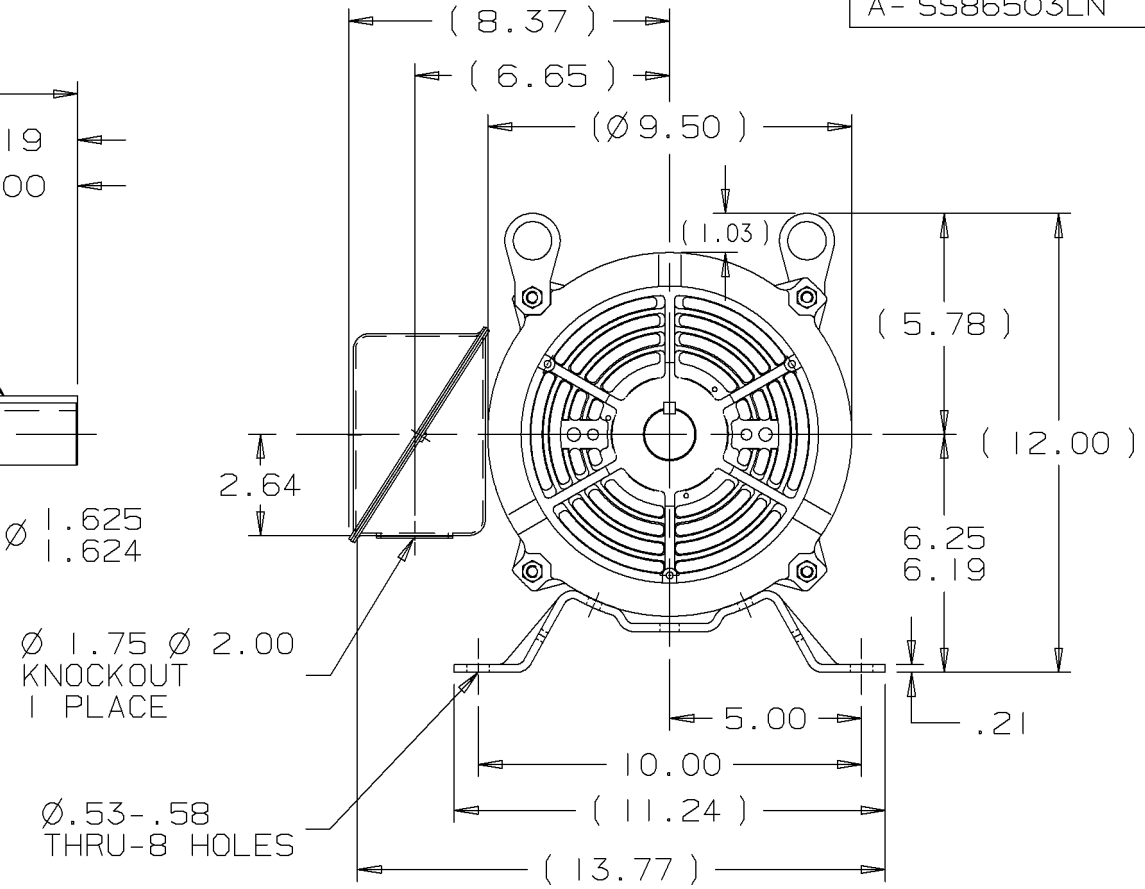

DASH	FR.	C	BS	MOUNTING
1370	254T	20.57	7.68	F1 OR F2
1545	254T/256T	22.32	9.43	F1 OR F2

NOTES:
1. NAMEPLATE TO BE READ FROM C'BOX SIDE OF MOTOR.
2. BOX CAN BE MOUNTED IN 90° STEPS.
3. BOX CAN BE MOUNTED ON OPPOSITE SIDE BY REMOVING BRACKETS AND TURNING FRAME 180°. (EXCEPT AS NOTED.)
4. F2 MOUNT -USES 2ND HOLE ON 1370 FRAME.

REV	DATE	CHANGE	NAME
2	01-31-2000	UPDATED CONDUIT BOX PER CN 28427	TJB
1	07-20-1999	NEW DRAWING	TRB

Lincoln MOTORS

UNLESS OTHERWISE SPECIFIED DIMENSIONS ARE IN INCHES
TOL. ON XX± .02 XXX± .005 XXXX± .0005 ANGLES± 7'30"

MAX. SURFACE ROUGHNESS UNLESS OTHERWISE NOTED
FINISH
MATERIAL

DRAWN BY	TRB	07-20-1999
CHKD BY	ML	07-20-1999
APPD BY	GK	07-20-1999

PART NAME OUTLINE
250 FR. - BB - DR.PR.

DRWG NO A- SS86503LN

L | PURCHASED | CADD FILE NO. | SS86503LN

9/5/2007 5:16:42 AM -

```
ERROR: syntaxerror
OFFENDING COMMAND: --nostringval--

STACK:

/RS
-dictionary-
/Pscript_WinNT_Compat
-dictionary-
```

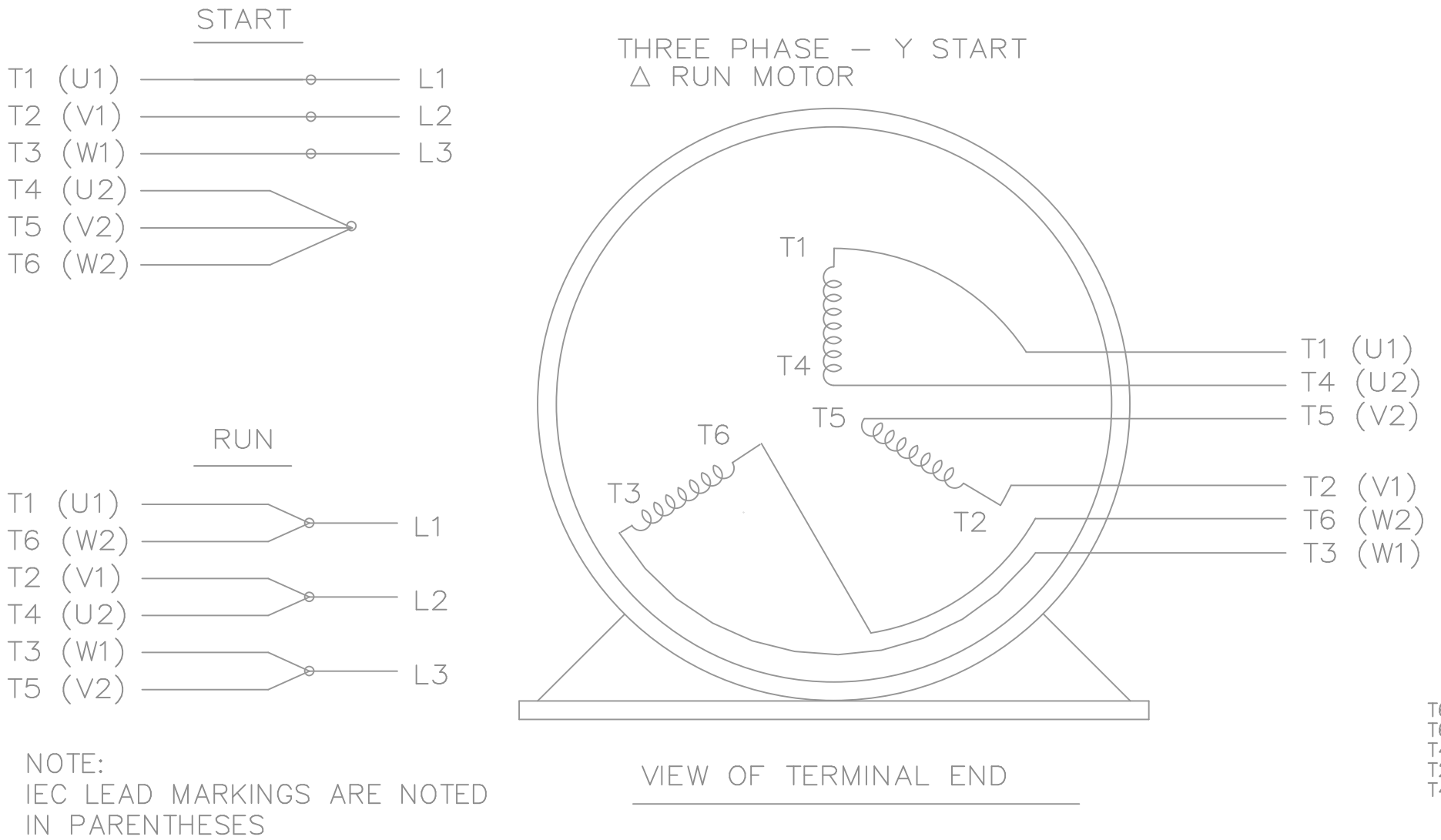

NOTE:
IEC LEAD MARKINGS ARE NOTED
IN PARENTHESES

NO.	REVISION	BY & DATE	CHK
3	REVISED TO MATCH M.E. ORIGINAL	TAT 07-25-2005	ML
2	REVISED DRAWING MISTAKE CN 29200-2980	ERH 05-15-2003	ML
1	NEW DRAWING	BLR 10-09-1999	

TOLERANCES UNLESS SPECIFIED

DEC.	INCHES
.X	±.1
.XX	±.02
.XXX	±.005
.XXXX	±.0005
ANG	±7'30"

Lincoln MOTORS

TITLE CONNECTION DIAGRAM
3ø – WYE START DELTA RUN

MAT'L.

FINISH

CAD FILE ee7340_ln

RFP

DIST WA-LB-SB

DRAWN	BLR 10-04-1999
CHK	DRS 10-04-1999
APPD	TB 10-04-1999
SCALE	1=1
REF	
FMF	
PREV	

SIZE A

DRAWING NO. EE7340-LN

PAGE OF

REV. 3

THIS DRAWING IN DESIGN AND DETAIL IS OUR PROPERTY AND MUST NOT BE USED EXCEPT IN CONNECTION WITH OUR WORK ALL RIGHTS OF DESIGN AND INVENTION ARE RESERVED
THIS IS AN ELECTRONICALLY GENERATED DOCUMENT – DO NOT SCALE THIS PRINT

9/30/2008 5:41:56 AM

Uncontrolled Copy

P.O. BOX 8003
WAUSAU, WI 54401-8003
PH. 715-675-3311

LEESON®

DATA VOLTS: 460

CERTIFICATION DATA SHEET

CONN. DIAGRAM: A-EE7340-LN
OUTLINE: A-SS86503LN-1370
WINDING: K2152191 R3 3

CAT #: LM30095

TYPICAL MOTOR PERFORMANCE DATA

HP	KW	SYNC RPM	FL RPM	FRAME	ENCLOSURE	TYPE	KVA CODE	DESIGN
20	14.9	3600	3520	254T	DP	TDX	F	B

PH	HZ	VOLTS	AMPS	START TYPE	DUTY	INSL	S.F.	AMB	ELEV.
3	60/60	200#200	53&68	VYE START DELTA RU	60 MIN	F	1.15	40	3300

F.L. EFF	91.0	3/4 LD EFF	91.7	1/2 LD EFF	90.2	GTD EFF	ELECT. TYPE
F.L. PF	88.6	3/4 LD PF	85.5	1/2 LD PF	78.0	89.5	SQ CAGE IND RUN

F.L. TORQUE	LR AMPS @ 460 V	L.R. TORQUE	B.D. TORQUE	F.L. RISE (°C)
30.0 LB-FT	331	52.5 LB-FT 175%	86.5 LB-FT 288%	45

PRESSURE @ 3	POWER	ROTOR WK²	MAX. LOAD WK²	SAFE STALL TIME	STARTS/HOUR	MOTOR WGT
78 dBA	87 dBA	0.65 LB-FT²	0 LB-FT²	15 SEC.	2	160 LB.

*** SUPPLEMENTAL INFORMATION ***

DE BRACKET TYPE	ODE BRACKET TYPE	MOUNT TYPE	MOTOR ORIENTATION	SEVERE DUTY	HAZARDOUS LOCATION	DRIP COVER	SCREENS	PAINT
STANDARD	STANDARD	RIGID	HORIZONTAL	NO	NONE	NO	NONE	GRAY - LINCOLN

BEARINGS DE	BEARINGS ODE	GREASE	SHAFT TYPE	SPECIAL DE	SPECIAL ODE	SHAFT MATERIAL	FRAME MATERIAL
BALL 309	BALL 208	POLYREX EM	T	NONE	NONE	AISI 1045 (C-240)	ROLLED STEEL

THERMOSTATS	PROTECTORS	WDG RTD's	BRG RTD's	THERMISTORS	CONTROL	SPACE HEATERS
NONE	NOT	NONE	NONE	NONE	FALSE	NA

R1 (ohms/ph)	R2 (ohms/ph)	X1 (ohms/ph)	X2 (ohms/ph)	Xm (ohms/ph)	VIBRATION (in/sec)	FLOAT
0.054	0.043	0.205	0.217	6.63	0.150	ODE

* NOTES *

INVERTER TORQUE: NONE
INV. HP SPEED RANGE: NONE

ENCODER: NONE
NONE
NONE NONE **PPR**

BRAKE: NONE
NONE NONE
FT-LB: NA
VOLTAGE: NONE **HZ:**
UL: V-INS, CONST UL REC

DATE: 1/30/2018

Uncontrolled Copy

Data Sheet

Date: 1/30/2018

LM30095

Data @ 200 V

Motor Load Data

Load	0%	25%	50%	75%	100%	115%	125%	LR	
Current (Amps)	16.1	20.7	31.1	41.4	53.1	61.0	67.9	331	
Torque (ft-lb)	0.00	7.5	15.0	22.2	30.0	34.5	37.5	52.5	
RPM	3600	3580	3565	3545	3520	3,515	3490	0	
Efficiency (%)		87.0	90.2	91.7	91.0	91.0	90.2		
P.F. (%)	9.0	60.0	78.0	85.5	88.6	89.0	89.0	40.0	

Motor Speed Data

	LR	Pull-Up	BD	Rated	Idle
Speed (RPM)	0	1800	3050	3520	3600
Current (Amps)	331	299	207	53.1	16.1
Torque (ft-lb)	52.5	48.0	86.5	30.0	0.00

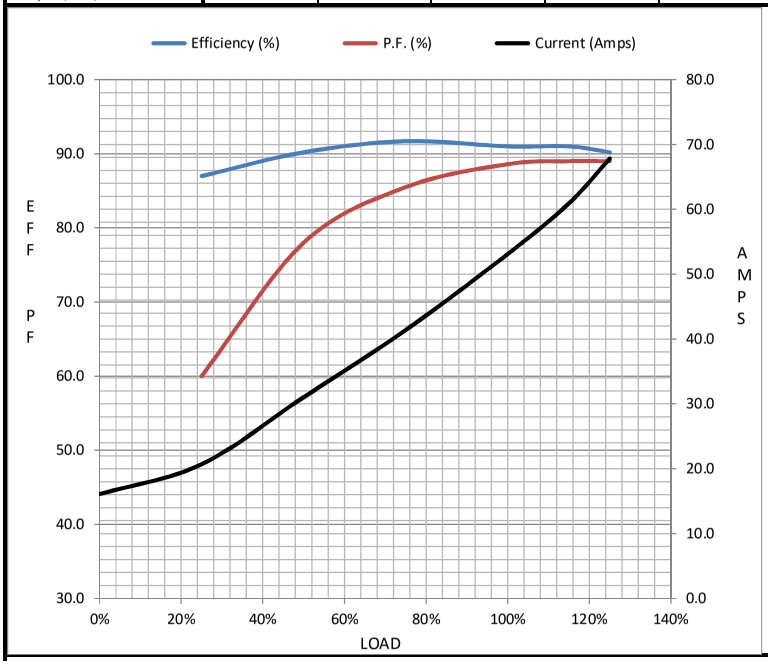

Information Block

HP	20.0	
Sync. RPM	3600	
Frame	254	
Enclosure	DP	
Construction	TDX	
Voltage	200#200	V
Frequency	60	Hz
Design	A	
LR Code letter	F	
Service Factor	1.15	
Temp Rise @ FL	45	° C
Duty	60 MIN	
Ambient	40	° C
Elevation	1,000	feet
Rotor/Shaft wk²	0.65	Lb-Ft²
Ref Wdg	K2152191 R3	
Sound Pressure @ 1M	78	dBA
VFD Rating	NONE	
Outline Dwg	A-SS86503LN-1370	
Conn. Diag	A-EE7340-LN	
Additional Specifications:		
0		
0		

EQUIV CKT (OHMS / PHASE)
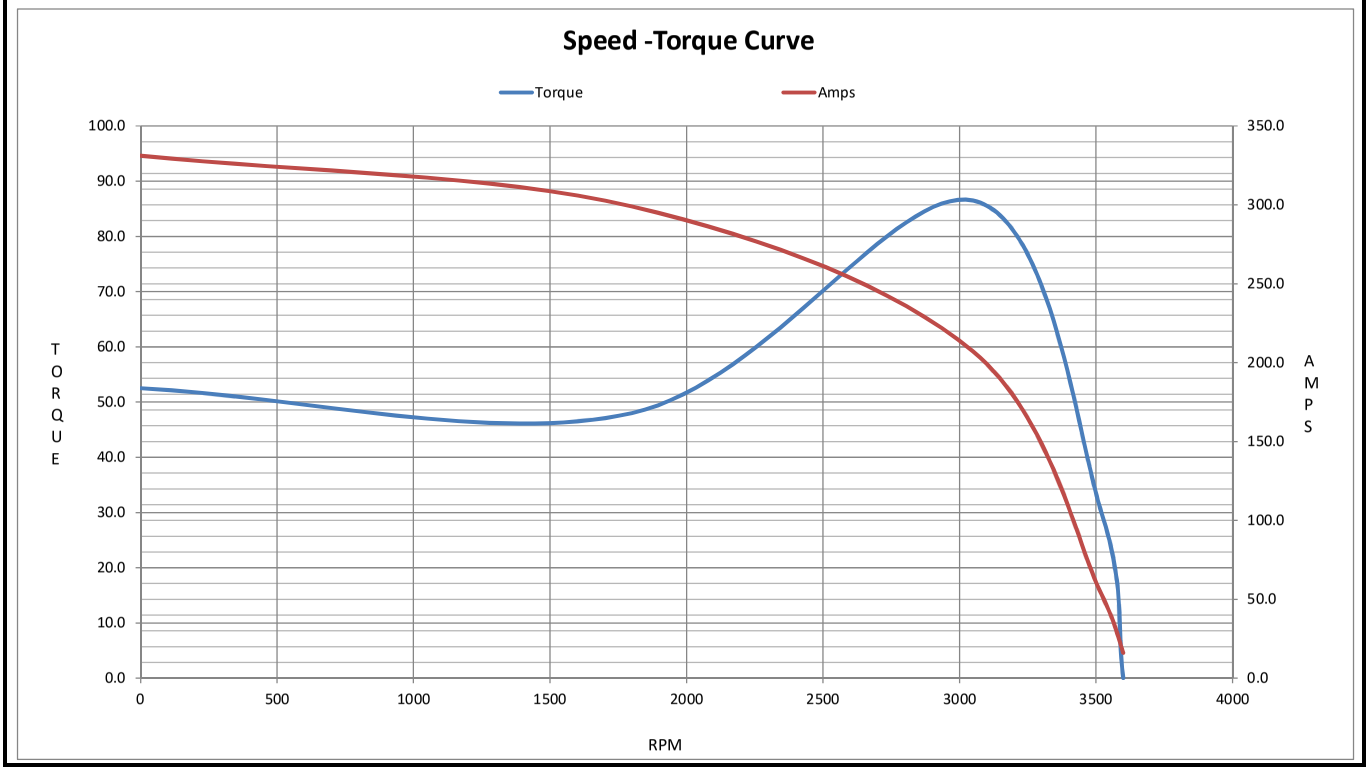
R1	R2	X1	X2	Xm
0.0540	0.0430	0.2050	0.2170	6.6300