35LYJ302

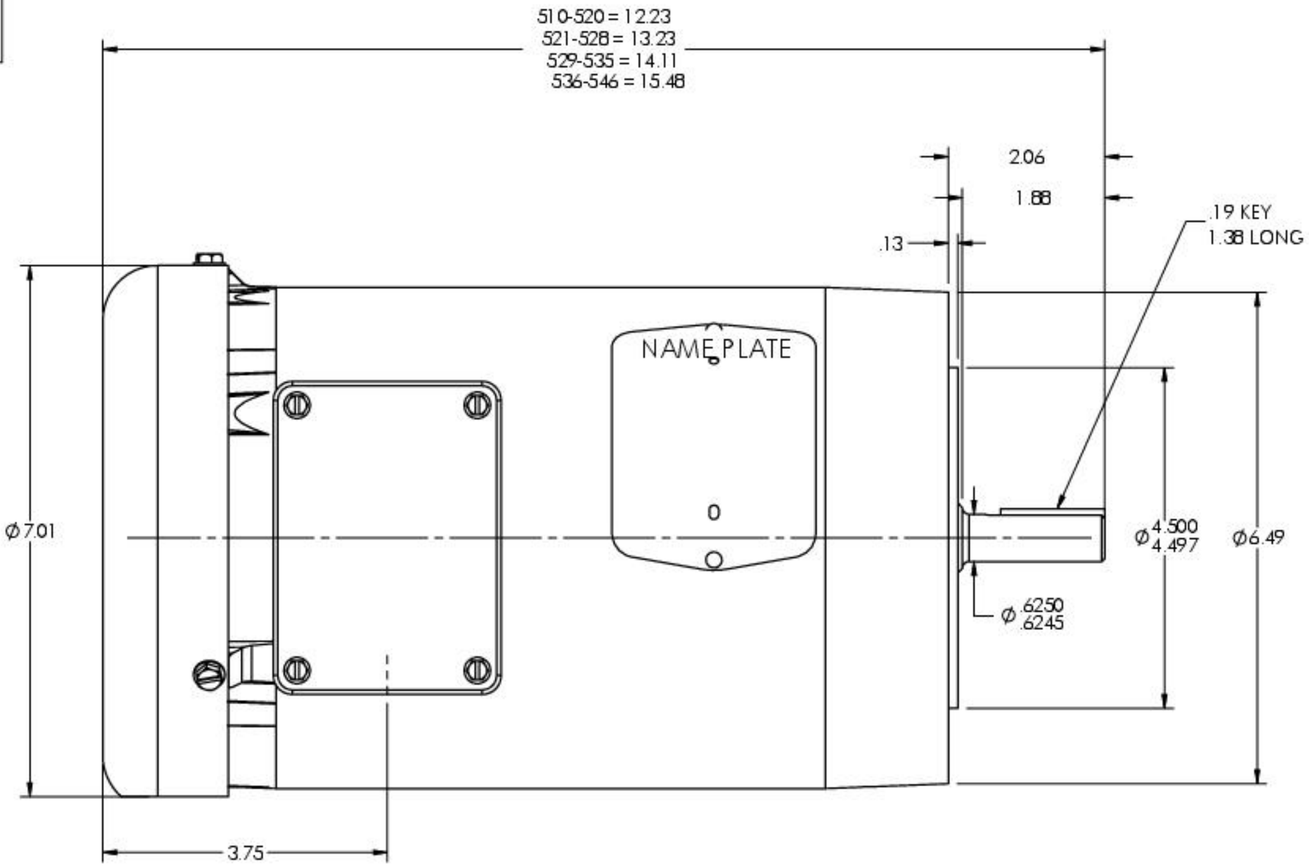

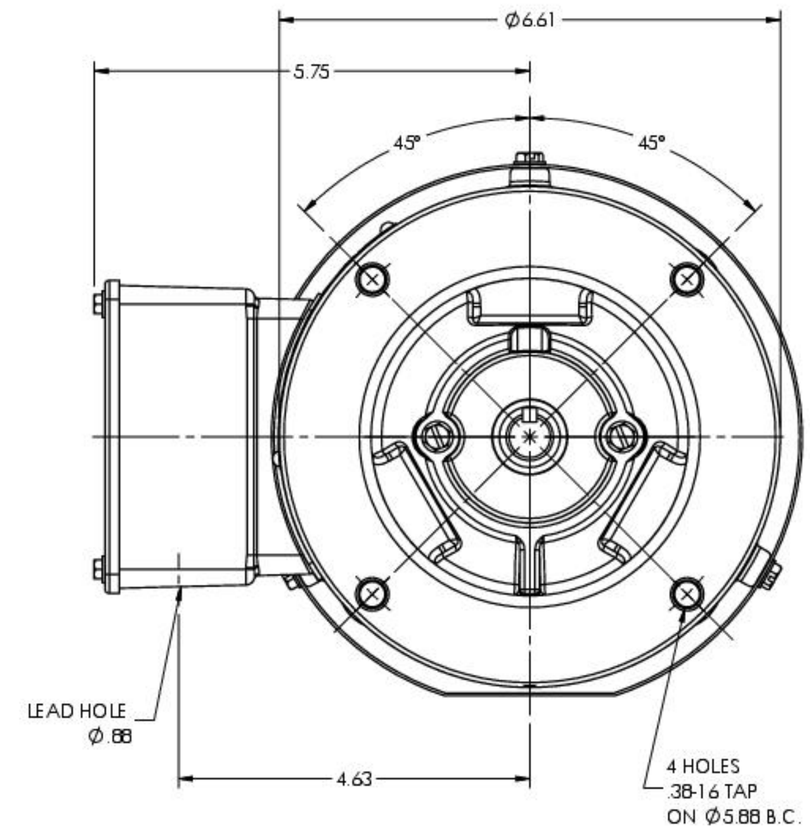

CUSTOMER IS RESPONSIBLE FOR DETERMINING THAT BALDOR'S PRODUCT WILL PERFORM SUITABLY IN THE INTENDED APPLICATION

REV. DESC: UPDATE 3D MODEL BOM PER REV AA, NO CHG TO 2D PRINT				BALDOR - RELIANCE®
REV: G	VERSION: 06	REVISED: 03:02:46 03/10/2022	TDR: 000001187335	
MODEL NO. 35LYJ302			REF: -	VERT 56C TEFC 35M
BY: USBUFRA	Material: -		◎ B	SH 1 of 1

35LYJ302