36LYA003

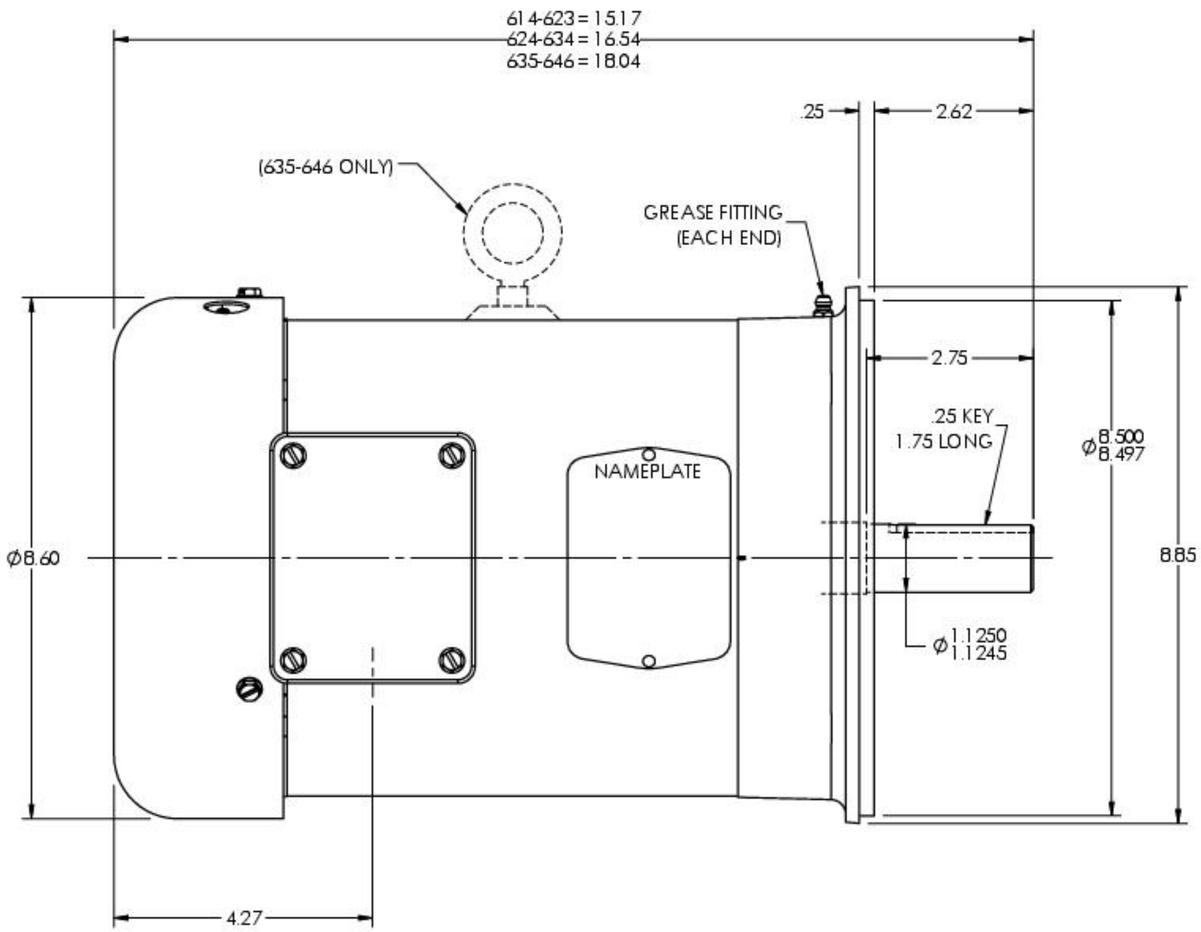

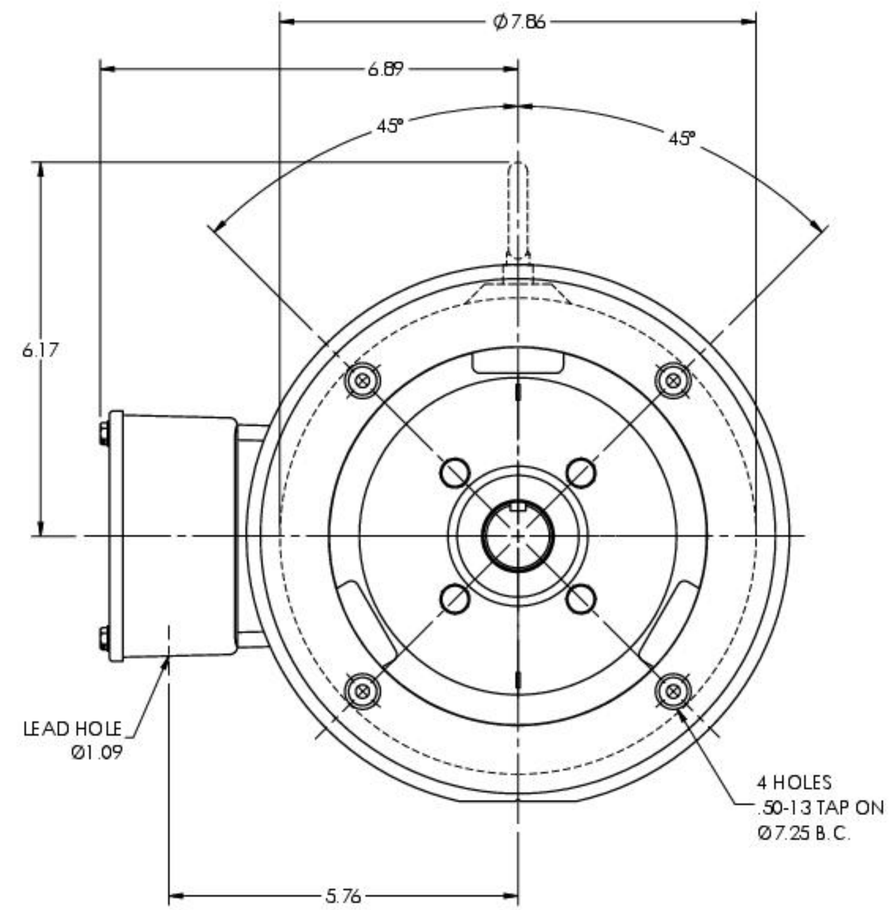

CUSTOMER IS RESPONSIBLE FOR DETERMINING THAT THE PRODUCT WILL PERFORM SUITABLY IN THE INTENDED APPLICATION

REV. DESC: LOAD INOFC CREATED SWD DRG INTO BUS - PACKAGE 37			
REV: M	VERSION: 05	REVISED: 04:57:44 09/18/2019	TDR: 000001120280
MODEL NO. 36LYA003			REF: -
BY: ENSTEKO			B

BALDOR - RELIANCE®

STD VERT FACE MTD 182-4TC TEFC 36M

36LYA003