37LYH329

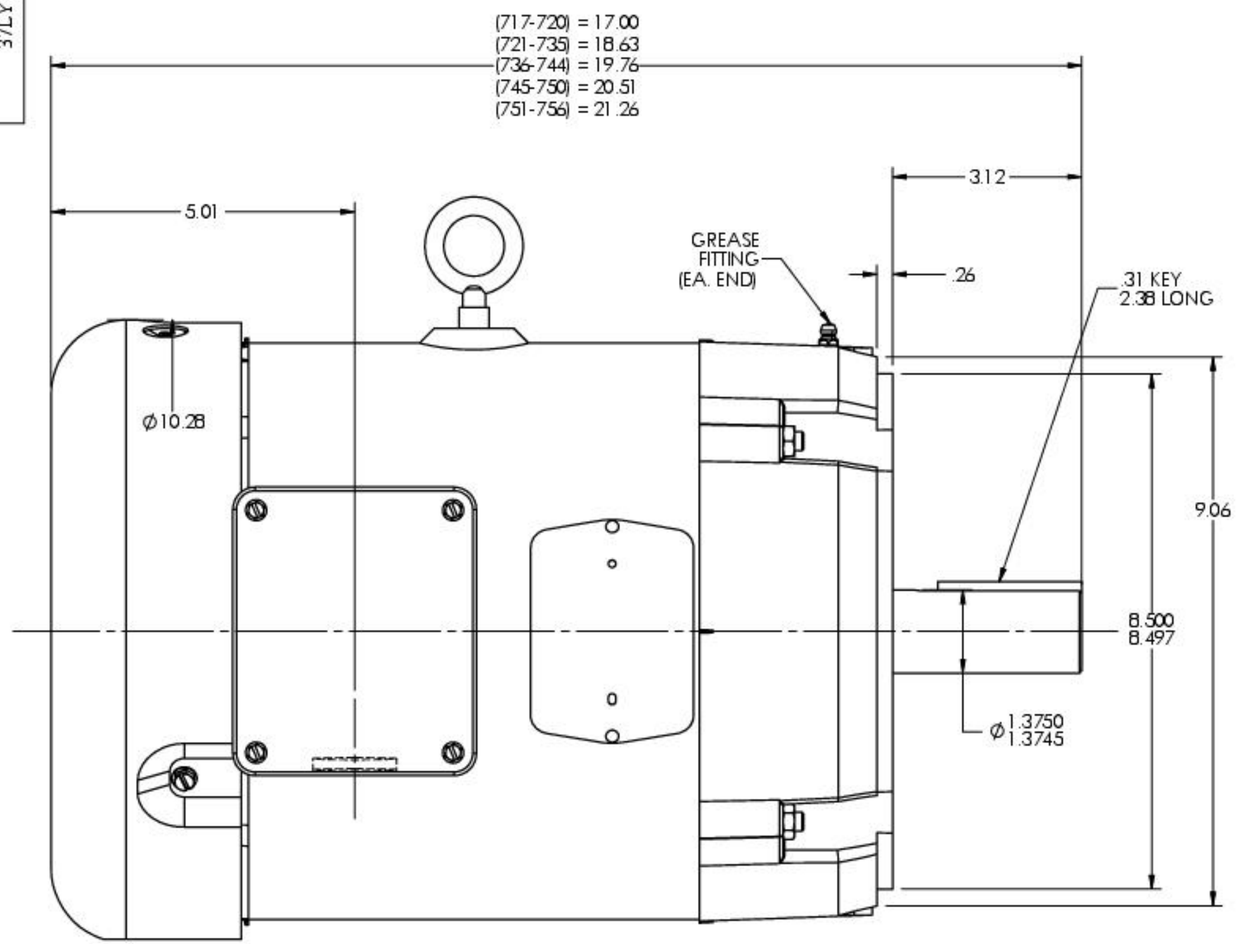

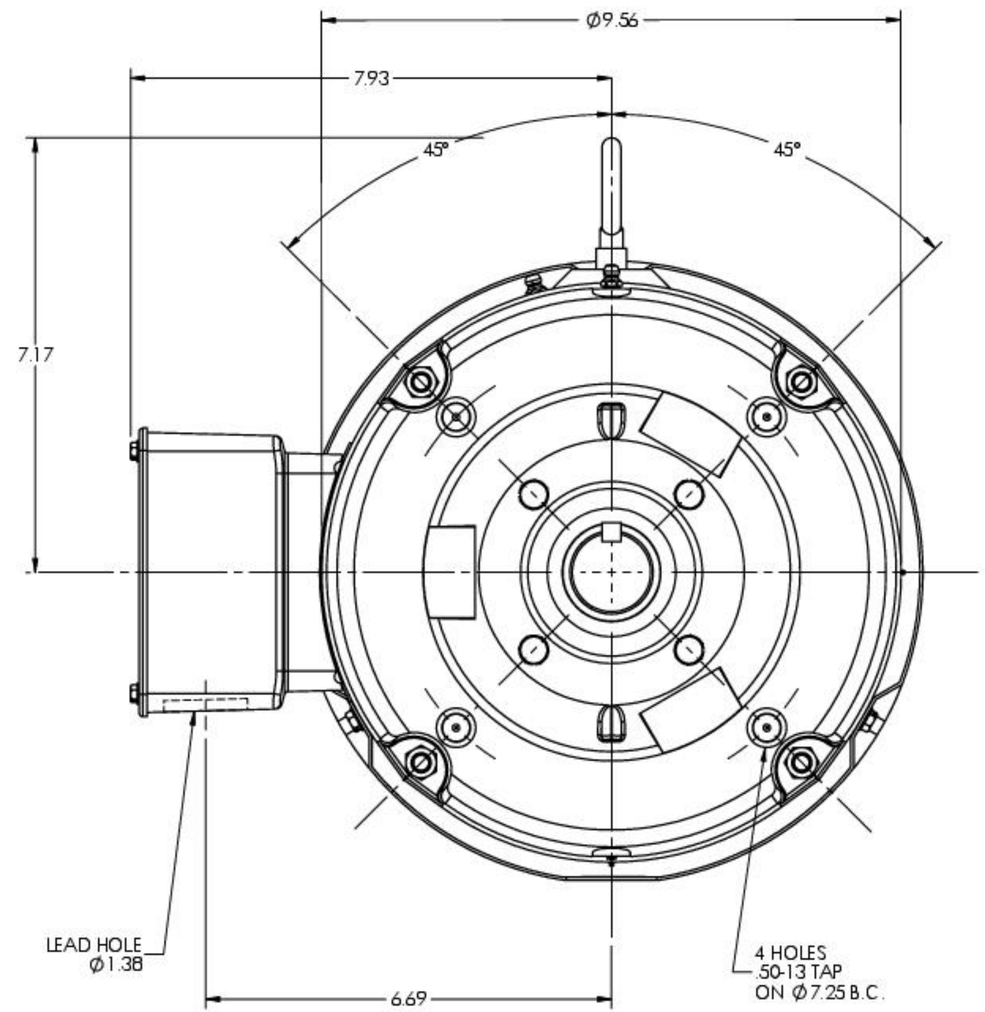

CUSTOMER IS RESPONSIBLE FOR DETERMINING THAT BALDOR'S PRODUCT WILL PERFORM SUITABLY IN THE INTENDED APPLICATION

REV. DESC: LOAD DRAWING TO SOLIDWORKS			
REV: C	VERSION: 01	REVISED: 02:43:42 07/12/2022	TDR: 000001192990
MODEL NO. 37LYH329			REF: -
BY: ENALEMO			B

BALDOR

VERT 213-5TC TEFC 37M WEPACT SHOVE

37LYH329