PRG102M (B70)

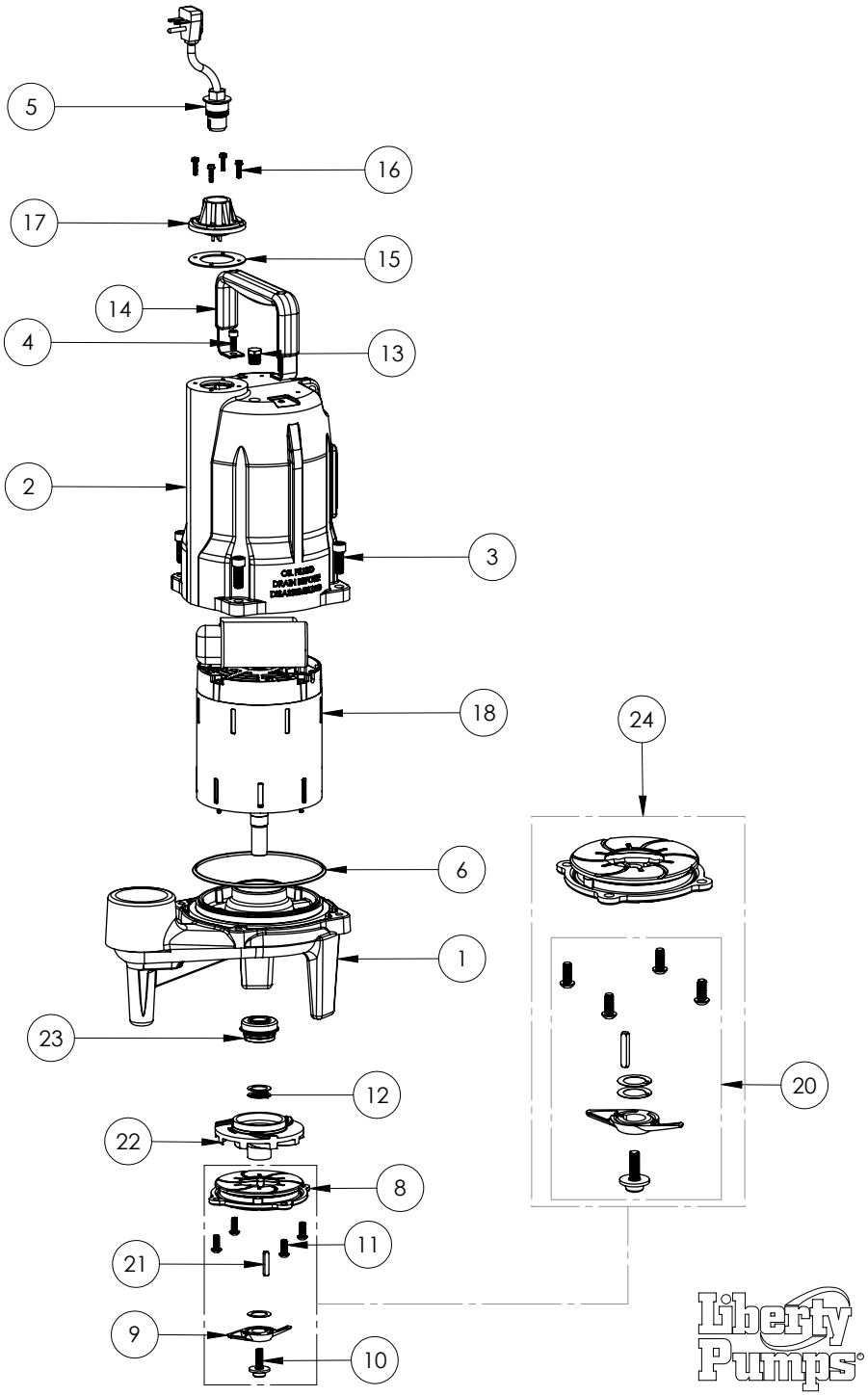

PRG102M (B70)

#	PART #	DESCRIPTION	QTY	Note
1	340100R	VOLUTE, POWDER COATED	1	
2	340000R	MOTOR HOUSING, POWDER COATED	1	
3	5862000	BOLT, 3/8-16X1 SHCS SS	4	
4	8103000	SCREW 1/4-20x5/8" HX SKT SS	2	
5	K001058	POWER CORD, 10FT. 230V	1	
6	3403000	O-RING	1	
8	3404000	MACHINED CUTTER PLATE	1	
9	3406000	CUTTER 2 BLADE MACH	1	
10	56362B0	FLANGED IMPELLER BOLT, M8 THREAD	1	
11	3405000	1/4-20 X 5/8 BUTTON HEAD SS CAP SCREW	4	
12	K001445	ROTARY CUTTER SHIM KIT	4	
13	50710A0	PIPE PLUG, 1/4" HEX HD BRASS NPTF	1	
14	3411200	HANDLE	1	
15	5060000	CORD PLATE GASKET	1	
16	8064000	#8-32 x 5/8 HEX WASHER HEAD SCREW	4	
17	5014000	CORD PLATE	1	
18	3407000	60Hz 1HP MOTOR	1	[1]
20	K001447	PROVORE CUTTER REPLACEMENT KIT	1	[2]
21	56350C0	KEY, 3/16 X 3/16 X 1.06"	1	
22	3410000	9 VANE IMPELLER	1	
23	5633000	3/4" UNITIZED SHAFT SEAL	1	[1]
24	K001555	CUTTER KIT, PROVORE WTH CUTTER PLATE	1	

PART NOTES:

[1] - Part requires factory authorized service. Contact Liberty Pumps at 1-800-543-2550

[2] - For ProVoreCutter Replacment Instructions see PRG Cutter Replacement Procedure